Immutability

Immutable Objects

- **Values stored in state variables cannot change**

- Immutable objects are stored on the heap just like any other object
  - But we don't worry about the state changing when we pass the reference to a method/function

Immutable Objects

- What if an immutable object needs to change state?
- Create a copy of the object with the change applied

Immutable Objects

- This ImmutableCounter class takes an initial value in its constructor and has methods to increment and decrement this value
- The internal Int is a value and cannot change
  - It also can't be accessed (Artificial restriction to show more recursion)

```
class ImmutableCounter(counter: Int) {

 def printCount():Unit = {
    println(this.counter)
  }

  def increase(): ImmutableCounter = {
    new ImmutableCounter(this.counter + 1)
  }

  def decrease(): ImmutableCounter = {
    new ImmutableCounter(this.counter - 1)
  }

}
```

Immutable Objects

- Since the Int cannot change
  - We simulate changes by creating a new object on the heap with the change applied
- Create and return a new ImmutableCounter whenever a "change" is made

```
class ImmutableCounter(counter: Int) {

 def printCount():Unit = {
    println(this.counter)
  }

  def increase(): ImmutableCounter = {
    new ImmutableCounter(this.counter + 1)
  }

  def decrease(): ImmutableCounter = {
    new ImmutableCounter(this.counter - 1)
  }

}
```

Immutable Objects

- Since we return a new ImmutableCounter
  - We must use this return value or we will not see the change

```
class ImmutableCounter(counter: Int) {

 def printCount():Unit = {
    println(this.counter)
  }

  def increase(): ImmutableCounter = {
    new ImmutableCounter(this.counter + 1)
  }

  def decrease(): ImmutableCounter = {
    new ImmutableCounter(this.counter - 1)
  }

}
```

```
def updateCounter(n: Int, counter: ImmutableCounter): ImmutableCounter = {
  if(n==0){
    counter
  }else if(n < 0){
    updateCounter(n+1, counter.decrease())
  }else{
    updateCounter(n-1, counter.increase())
  }
}

def main(args: Array[String]): Unit = {
  val counter: ImmutableCounter = new ImmutableCounter(10)
  val counter2: ImmutableCounter = updateCounter(20, counter)

  counter.printCount()
  counter2.printCount()
}
```

Immutable Objects

- What if we want to increment this object 10 times?
- Since we [artificially] restrict access to the Int we can only increment and decrement
- We could use a loop and reassign a variable at each iteration (requires var)

```
def updateCounter(n: Int, counter: ImmutableCounter): ImmutableCounter = {
  if(n==0){
    counter
  }else if(n < 0){
    updateCounter(n+1, counter.decrease())
  }else{
    updateCounter(n-1, counter.increase())
  }
}

def main(args: Array[String]): Unit = {
  val counter: ImmutableCounter = new ImmutableCounter(10)
  val counter2: ImmutableCounter = updateCounter(20, counter)

  counter.printCount()
  counter2.printCount()
}
```

```
class ImmutableCounter(counter: Int) {

 def printCount():Unit = {
    println(this.counter)
  }

  def increase(): ImmutableCounter = {
    new ImmutableCounter(this.counter + 1)
  }

  def decrease(): ImmutableCounter = {
    new ImmutableCounter(this.counter - 1)
  }

}
```

Immutable Objects

- What if we want to increment this object 10 times?
- Use a recursive approach
  - Base case of n==0
  - Recursively increment/decrement and make a recursive call with n closer to 0

```
def updateCounter(n: Int, counter: ImmutableCounter): ImmutableCounter = {
  if(n==0){
    counter
  }else if(n < 0){
    updateCounter(n+1, counter.decrease())
  }else{
    updateCounter(n-1, counter.increase())
  }
}

def main(args: Array[String]): Unit = {
  val counter: ImmutableCounter = new ImmutableCounter(10)
  val counter2: ImmutableCounter = updateCounter(20, counter)

  counter.printCount()
  counter2.printCount()
}
```

```
class ImmutableCounter(counter: Int) {

 def printCount():Unit = {
    println(this.counter)
  }

  def increase(): ImmutableCounter = {
    new ImmutableCounter(this.counter + 1)
  }

  def decrease(): ImmutableCounter = {
    new ImmutableCounter(this.counter - 1)
  }

}
```

Scala Lists are Immutable

Scala Lists

- Scala Lists cannot be modified in any way
  - They are immutable
- If an element is added/removed *or* any value is changed
  - A new list is created
- Must store the new list in a variable to see the change
- With "var" you need to reassign the new List to the variable to see the change

```scala
def main(args: Array[String]): Unit = {
    val list: List[Int] = List(2)
    val newList: List[Int] = 1 :: list
}
```

```scala
def main(args: Array[String]): Unit = {
    var list: List[Int] = List(2)
    list = 1 :: list
}
```

Memory Diagram

```
class Counter(counter: Int) {
 def printCount():Unit = {
    println(this.counter)
  }
  def increase(): Counter = {
    new Counter(this.counter + 1)
  }
}
```

```
def updateCounter(n: Int, counter: Counter): Counter = {
  if(n<=0) {
    counter
  } else {
    updateCounter(n-1, counter.increase())
  }
}

def main(args: Array[String]): Unit = {
  val counter: Counter = new Counter(10)
  val counter2: Counter = updateCounter(2, counter)

  counter.printCount()
  counter2.printCount()
}
```

- Slightly modified code for space concerns

Stack		Heap
Name	Value	

in/out

```scala
class Counter(counter: Int) {
 def printCount():Unit = {
    println(this.counter)
  }
  def increase(): Counter = {
    new Counter(this.counter + 1)
  }
}
```

```scala
def updateCounter(n: Int, counter: Counter): Counter = {
  if(n<=0) {
    counter
  } else {
    updateCounter(n-1, counter.increase())
  }
}

def main(args: Array[String]): Unit = {
  val counter: Counter = new Counter(10)
  val counter2: Counter = updateCounter(2, counter)

  counter.printCount()
  counter2.printCount()
}
```

- Creating an immutable object
- Works the same as creating any other object

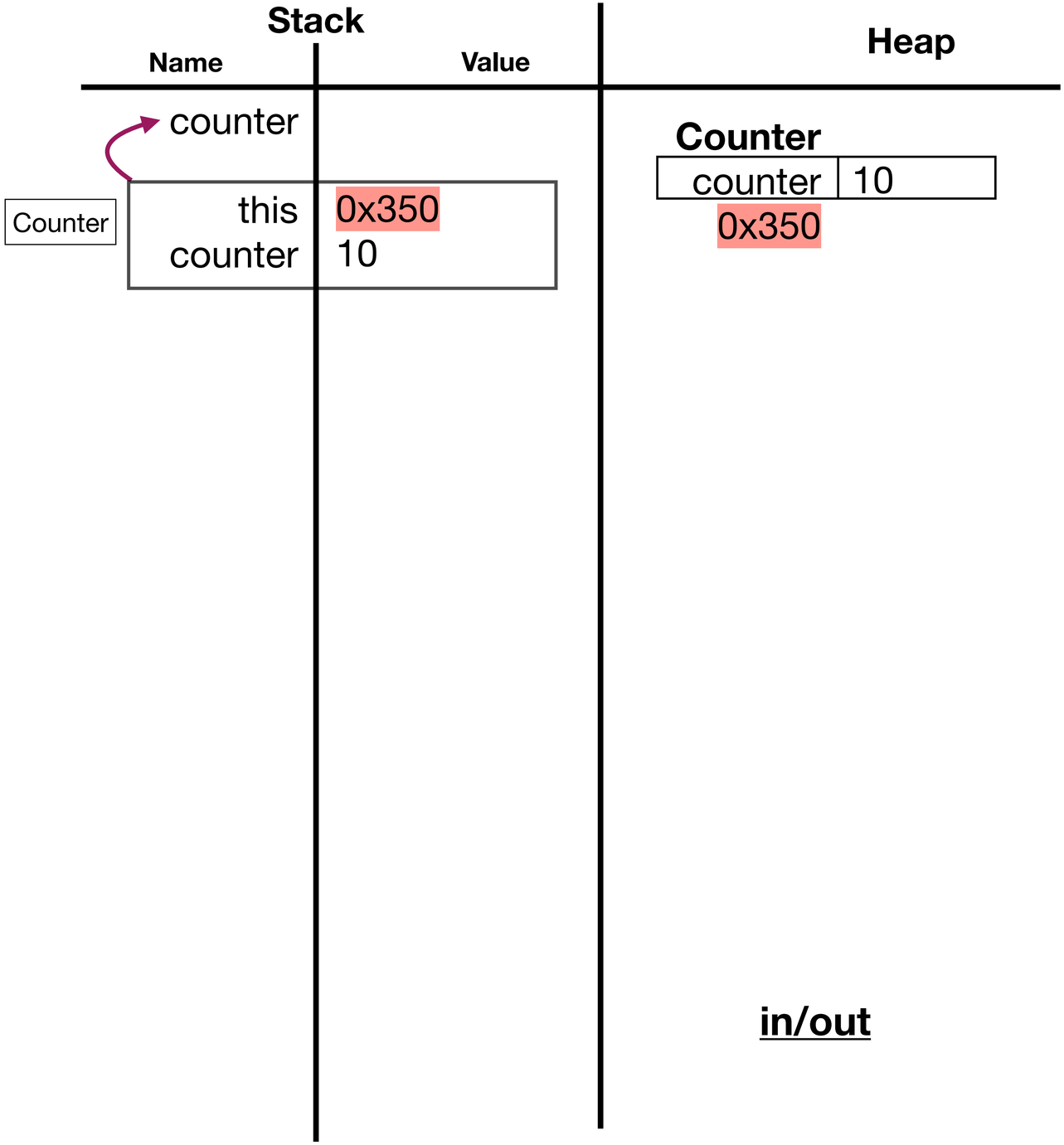

in/out

```scala
class Counter(counter: Int) {
 def printCount():Unit = {
    println(this.counter)
  }
  def increase(): Counter = {
    new Counter(this.counter + 1)
  }
}
```

```scala
def updateCounter(n: Int, counter: Counter): Counter = {
  if(n<=0) {
    counter
  } else {
    updateCounter(n-1, counter.increase())
  }
}

def main(args: Array[String]): Unit = {
  val counter: Counter = new Counter(10)
  val counter2: Counter = updateCounter(2, counter)

  counter.printCount()
  counter2.printCount()
}
```

- Call updateCounter
- Check for the base case
- n is >0 so we run the recursive part of the method

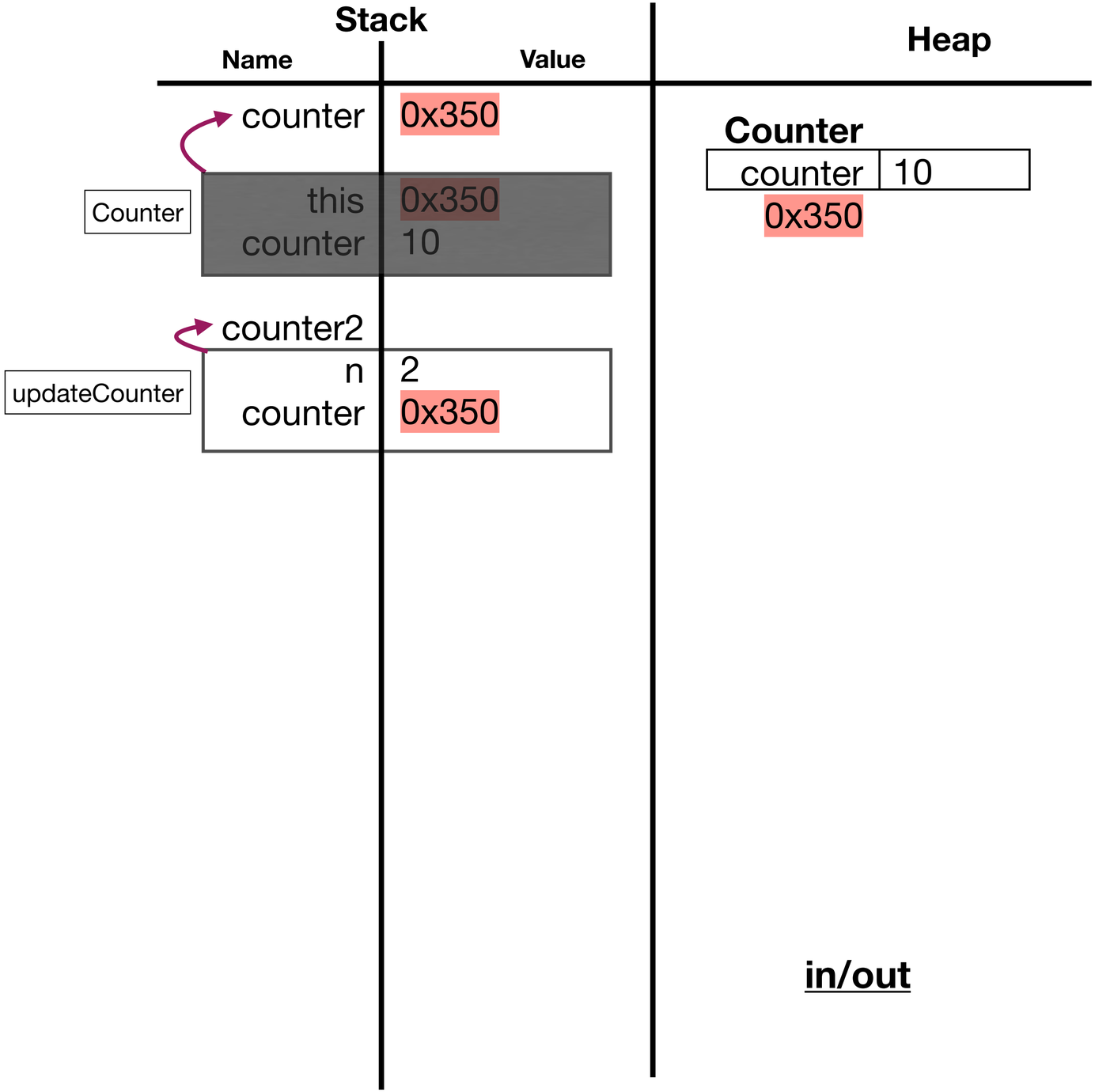

```scala
class Counter(counter: Int) {
 def printCount():Unit = {
    println(this.counter)
  }
  def increase(): Counter = {
    new Counter(this.counter + 1)
  }
}
```

```scala
def updateCounter(n: Int, counter: Counter): Counter = {
  if(n<=0) {
    counter
  } else {
    updateCounter(n-1, counter.increase())
  }
}

def main(args: Array[String]): Unit = {
  val counter: Counter = new Counter(10)
  val counter2: Counter = updateCounter(2, counter)

  counter.printCount()
  counter2.printCount()
}
```

- Our goal is to do as little work as possible to get closer to the base case
- We eventually have to call increase twice
  - Let's call it once and make a recursive call

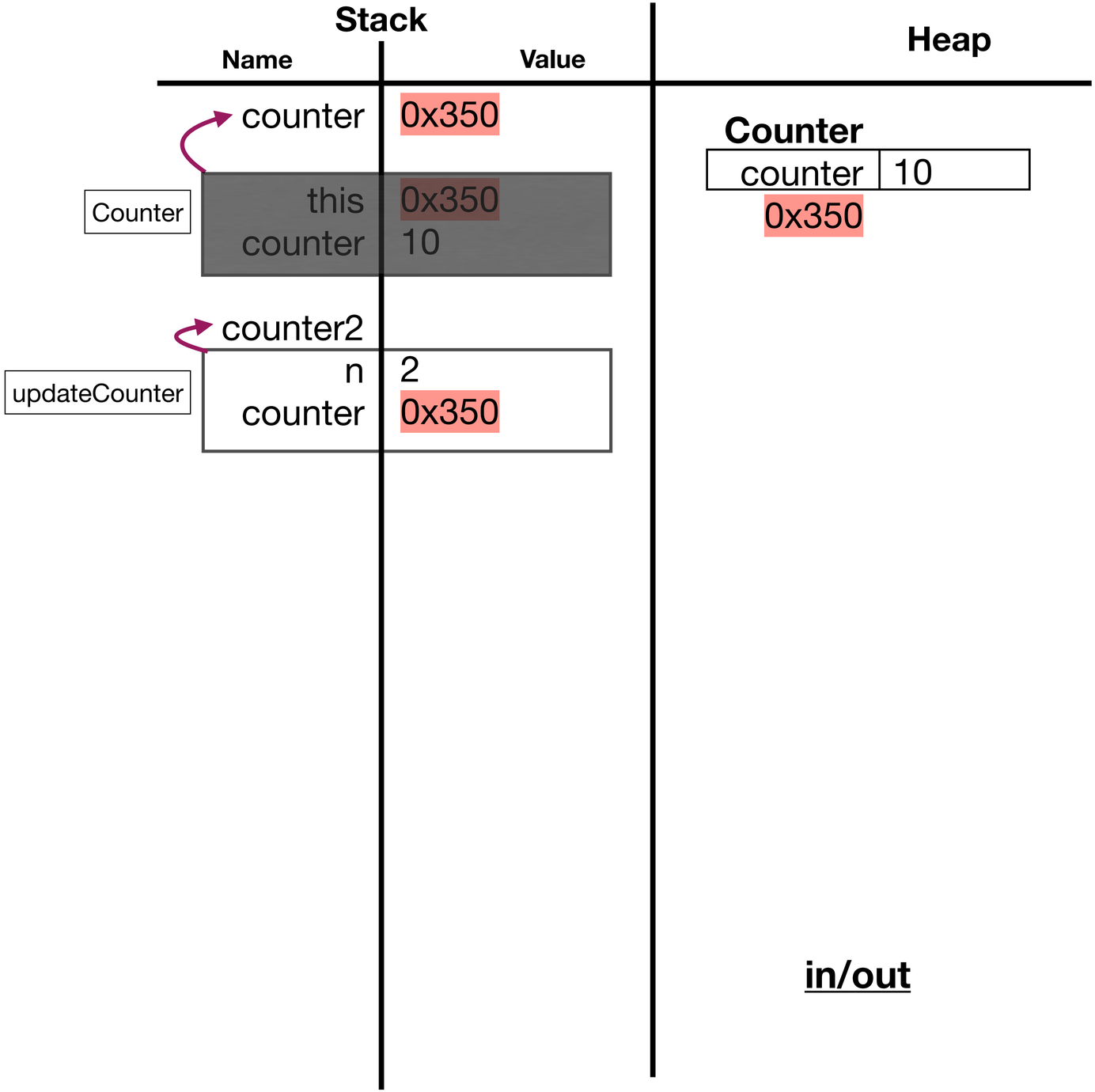

```scala
class Counter(counter: Int) {
 def printCount():Unit = {
    println(this.counter)
  }
  def increase(): Counter = {
    new Counter(this.counter + 1)
  }
}
```

```scala
def updateCounter(n: Int, counter: Counter): Counter = {
  if(n<=0) {
    counter
  } else {
    updateCounter(n-1, counter.increase())
  }
}

def main(args: Array[String]): Unit = {
  val counter: Counter = new Counter(10)
  val counter2: Counter = updateCounter(2, counter)

  counter.printCount()
  counter2.printCount()
}
```

- Before making the recursive call
  - call increase once

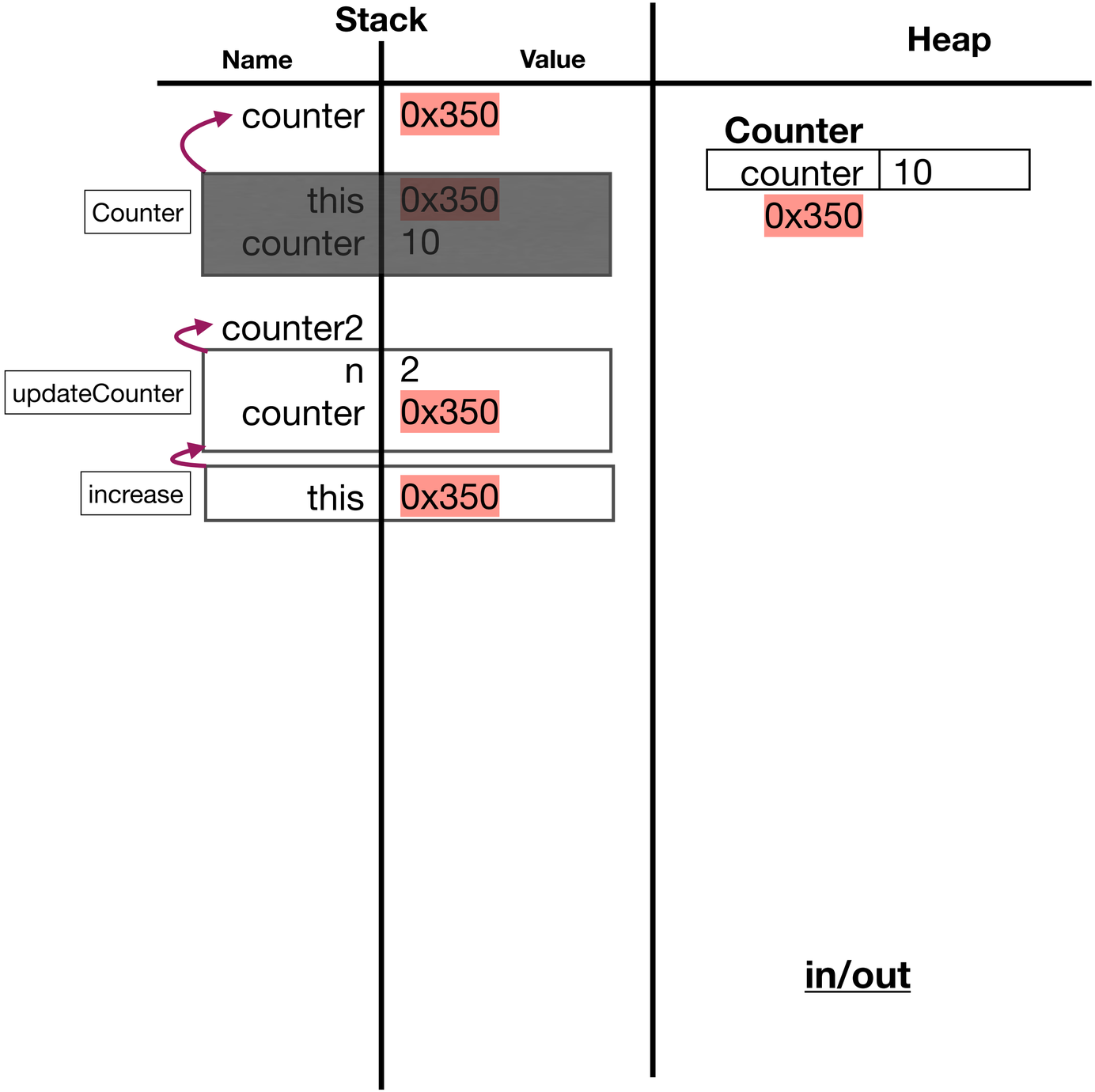

```scala
class Counter(counter: Int) {
 def printCount():Unit = {
    println(this.counter)
  }
  def increase(): Counter = {
    new Counter(this.counter + 1)
  }
}
```

```scala
def updateCounter(n: Int, counter: Counter): Counter = {
  if(n<=0) {
    counter
  } else {
    updateCounter(n-1, counter.increase())
  }
}

def main(args: Array[String]): Unit = {
  val counter: Counter = new Counter(10)
  val counter2: Counter = updateCounter(2, counter)

  counter.printCount()
  counter2.printCount()
}
```

- The increase method cannot modify the state of the counter
- Create a new Counter with the change applied instead

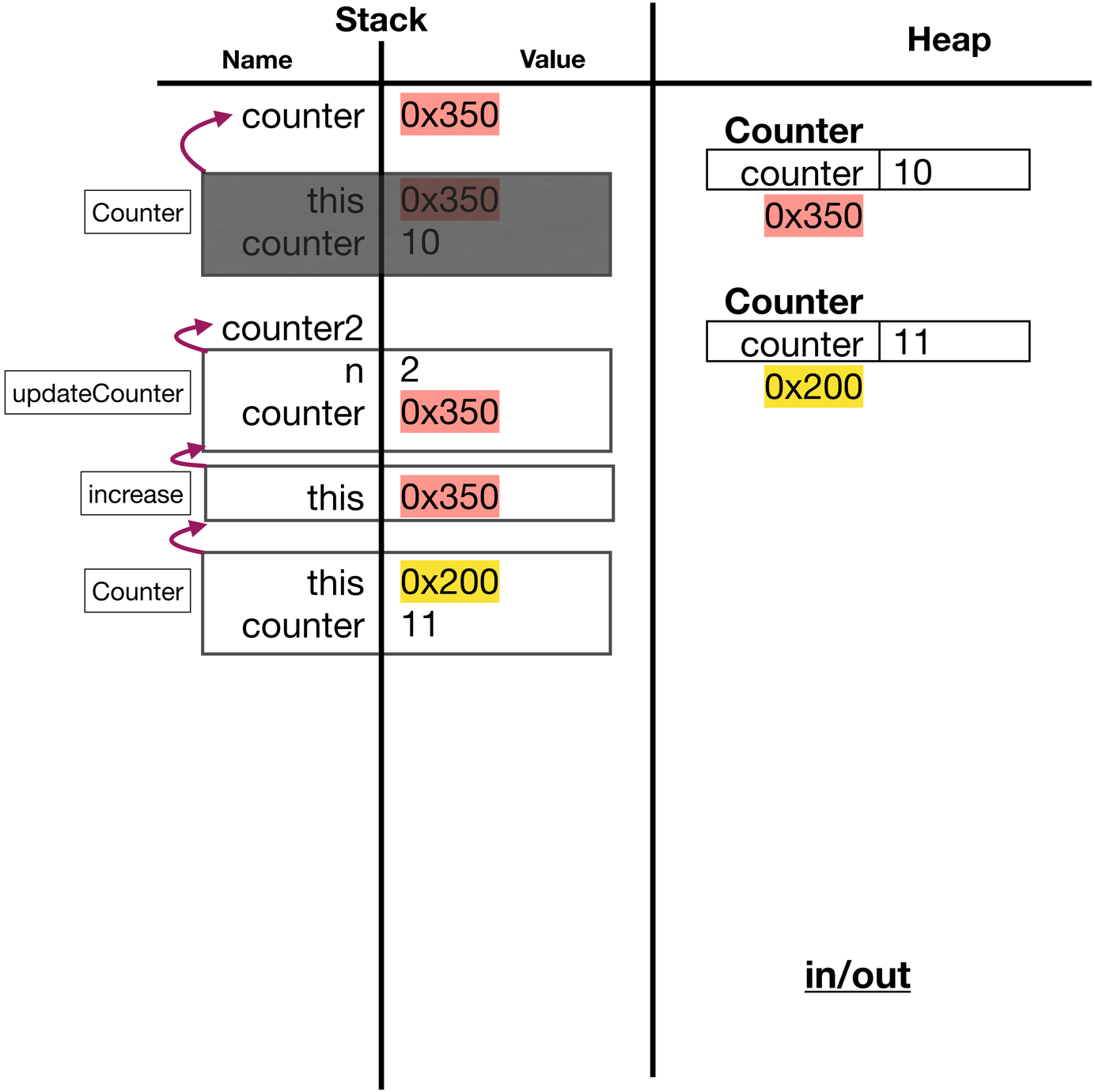

in/out

```scala
class Counter(counter: Int) {
 def printCount():Unit = {
    println(this.counter)
  }
  def increase(): Counter = {
    new Counter(this.counter + 1)
  }
}
```

```scala
def updateCounter(n: Int, counter: Counter): Counter = {
  if(n<=0) {
    counter
  } else {
    updateCounter(n-1, counter.increase())
  }
}

def main(args: Array[String]): Unit = {
  val counter: Counter = new Counter(10)
  val counter2: Counter = updateCounter(2, counter)

  counter.printCount()
  counter2.printCount()
}
```

- Methods return and we're ready for the recursive call

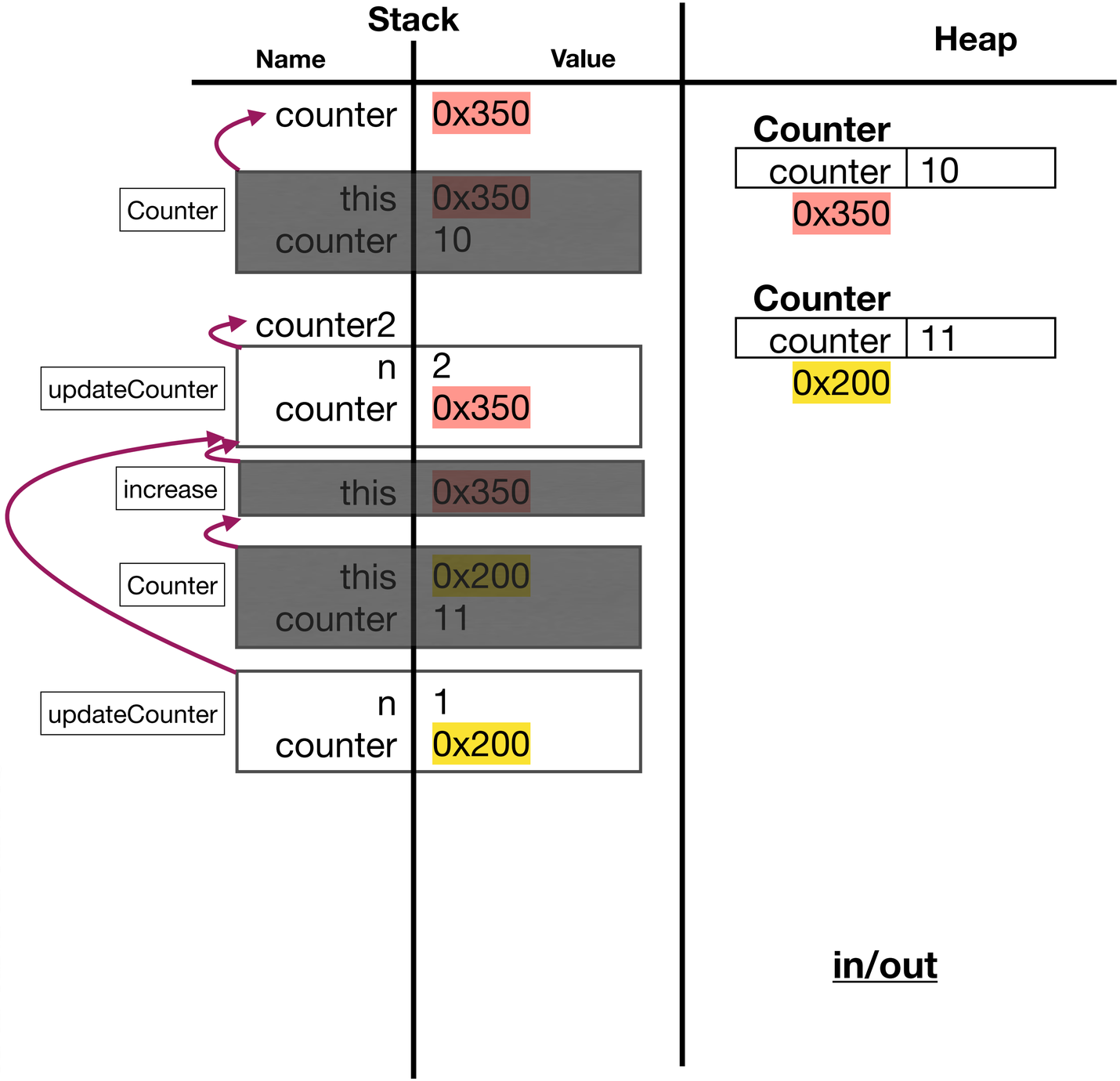

in/out

```scala
class Counter(counter: Int) {
 def printCount():Unit = {
    println(this.counter)
  }
  def increase(): Counter = {
    new Counter(this.counter + 1)
  }
}
```

```scala
def updateCounter(n: Int, counter: Counter): Counter = {
  if(n<=0) {
    counter
  } else {
    updateCounter(n-1, counter.increase())
  }
}

def main(args: Array[String]): Unit = {
  val counter: Counter = new Counter(10)
  val counter2: Counter = updateCounter(2, counter)

  counter.printCount()
  counter2.printCount()
}
```

- Repeat the process since we have still not reached the base case

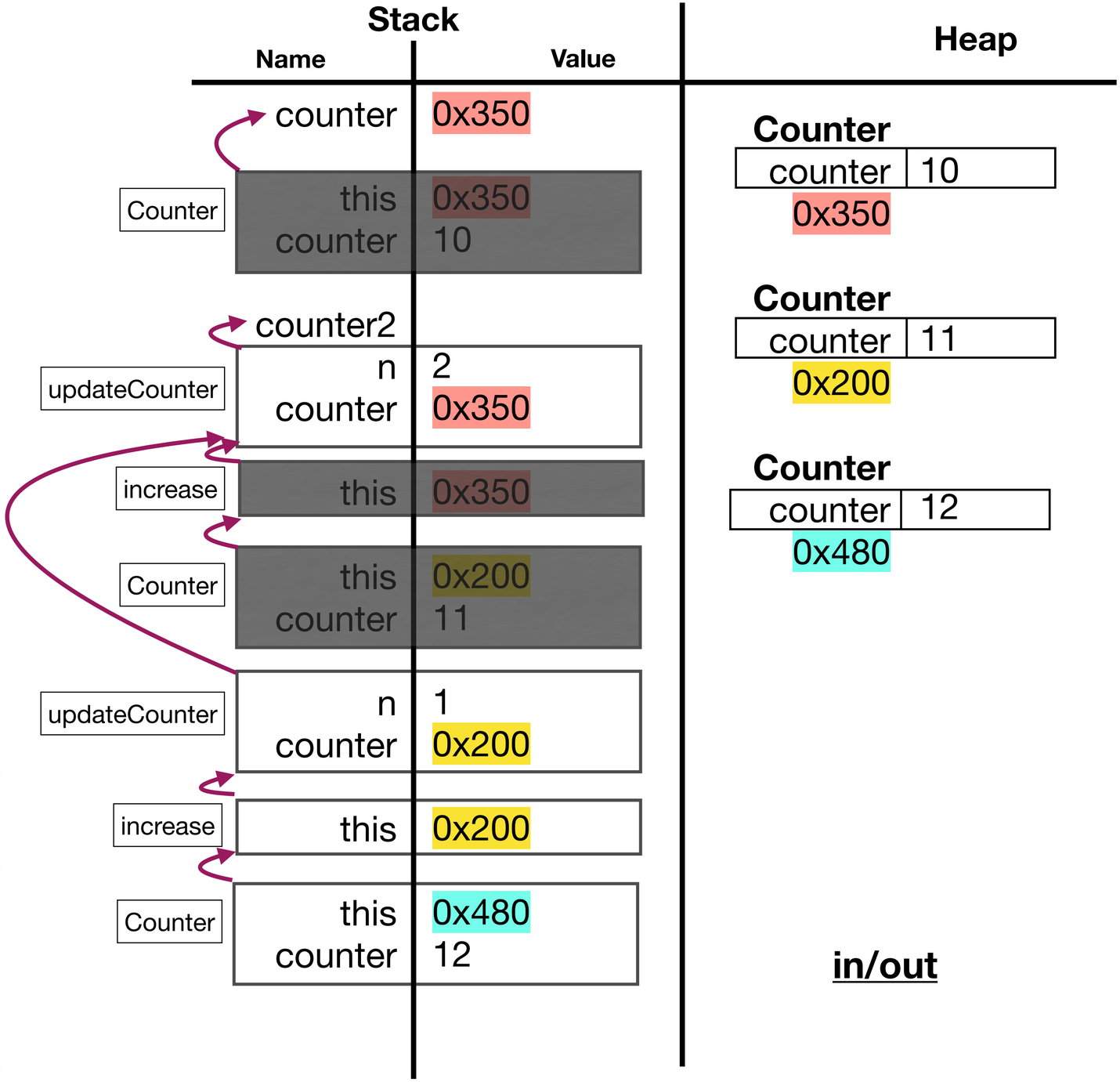

```scala
class Counter(counter: Int) {
 def printCount():Unit = {
    println(this.counter)
  }
  def increase(): Counter = {
    new Counter(this.counter + 1)
  }
}
```

```scala
def updateCounter(n: Int, counter: Counter): Counter = {
  if(n<=0) {
    counter
  } else {
    updateCounter(n-1, counter.increase())
  }
}

def main(args: Array[String]): Unit = {
  val counter: Counter = new Counter(10)
  val counter2: Counter = updateCounter(2, counter)

  counter.printCount()
  counter2.printCount()
}
```

- We've reached the base case
- If n is 0, return the provided counter

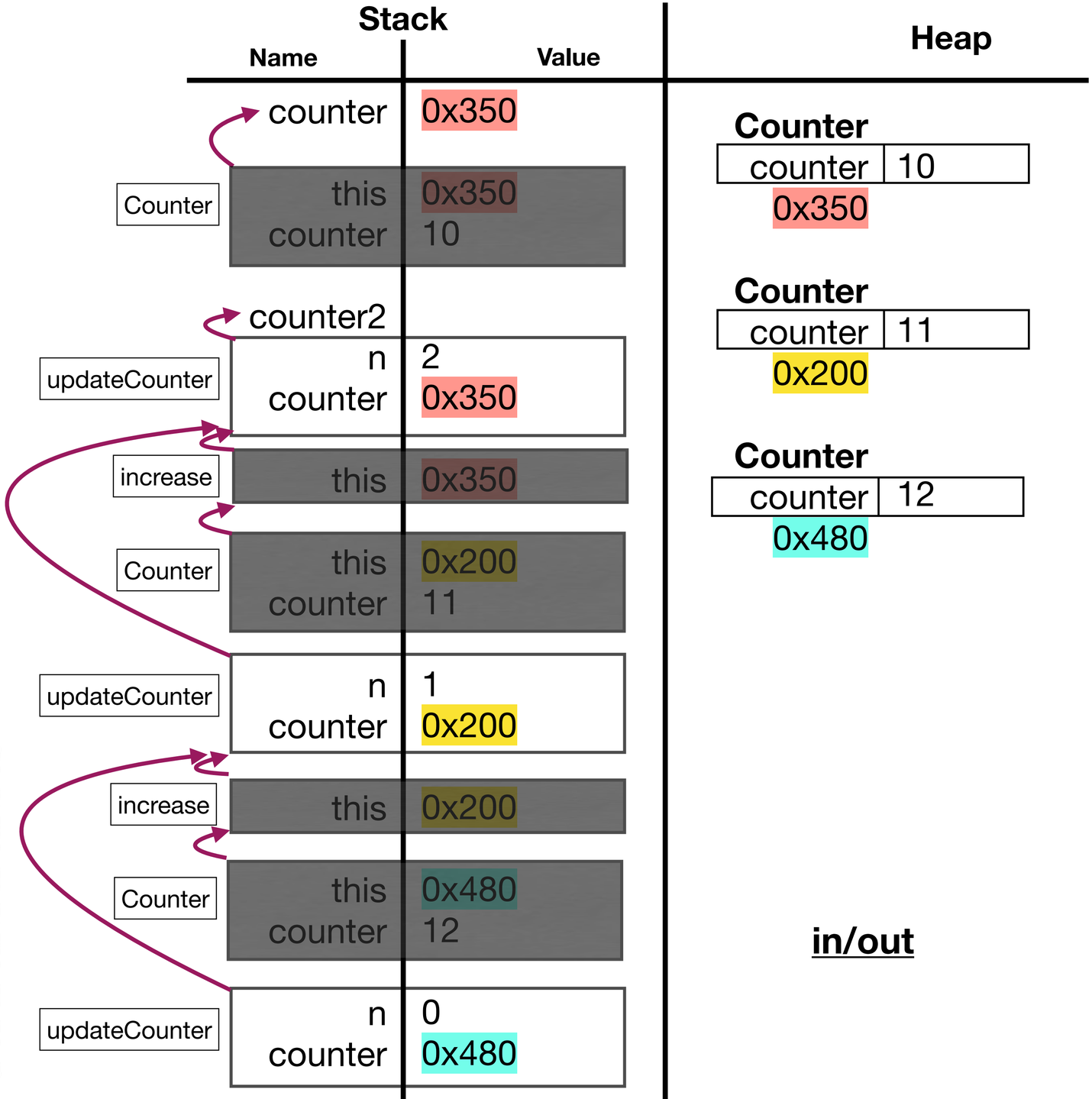

```scala
class Counter(counter: Int) {
 def printCount():Unit = {
    println(this.counter)
  }
  def increase(): Counter = {
    new Counter(this.counter + 1)
  }
}
```

```scala
def updateCounter(n: Int, counter: Counter): Counter = {
  if(n<=0) {
    counter
  } else {
    updateCounter(n-1, counter.increase())
  }
}

def main(args: Array[String]): Unit = {
  val counter: Counter = new Counter(10)
  val counter2: Counter = updateCounter(2, counter)

  counter.printCount()
  counter2.printCount()
}
```

- Return the reference 0x480 all the way up the recursive calls

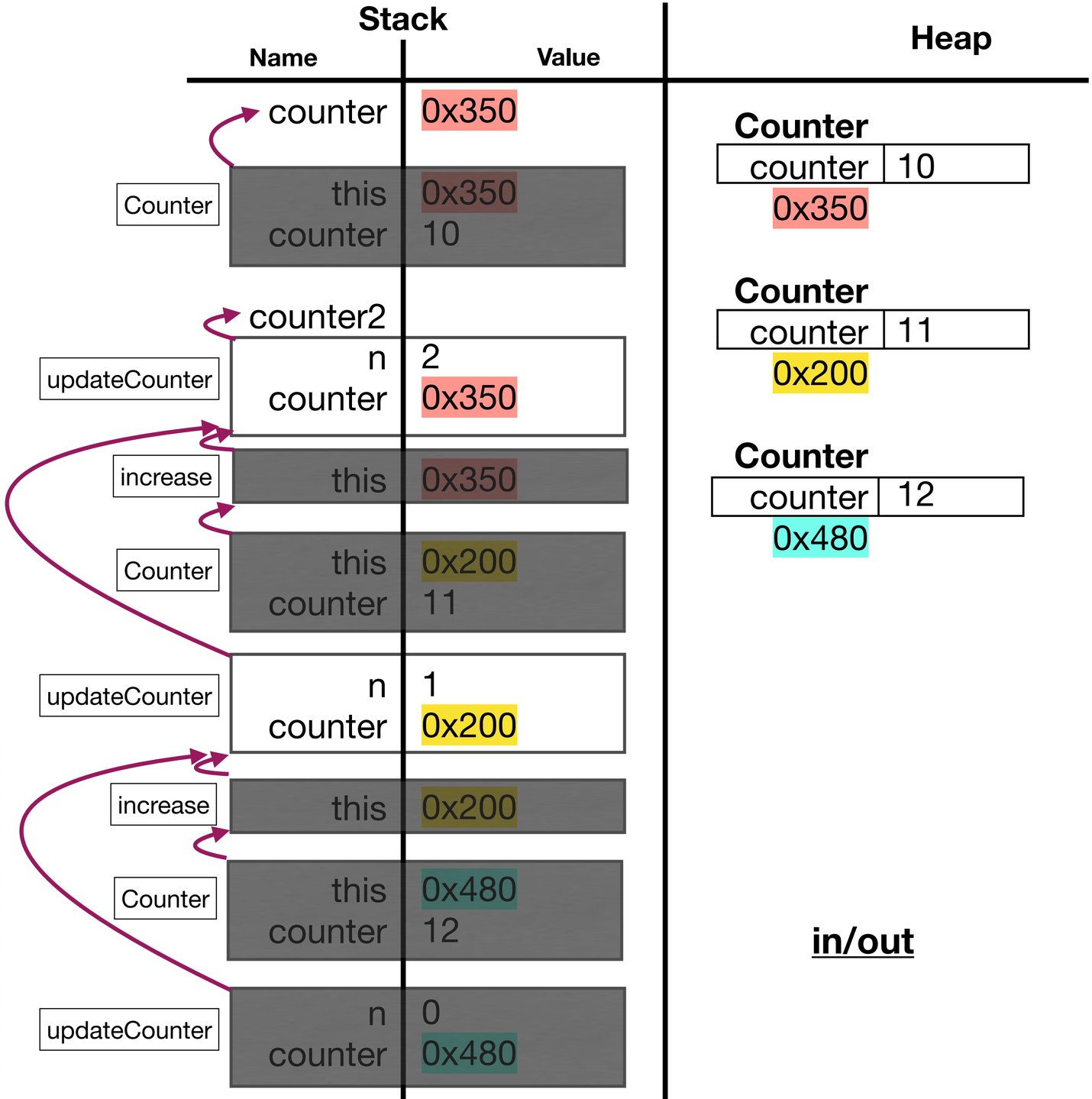

```scala
class Counter(counter: Int) {
 def printCount():Unit = {
    println(this.counter)
  }
  def increase(): Counter = {
    new Counter(this.counter + 1)
  }
}
```

```scala
def updateCounter(n: Int, counter: Counter): Counter = {
  if(n<=0) {
    counter
  } else {
    updateCounter(n-1, counter.increase())
  }
}

def main(args: Array[String]): Unit = {
  val counter: Counter = new Counter(10)
  val counter2: Counter = updateCounter(2, counter)

  counter.printCount()
  counter2.printCount()
}
```

- Return the reference 0x480 all the way up the recursive calls

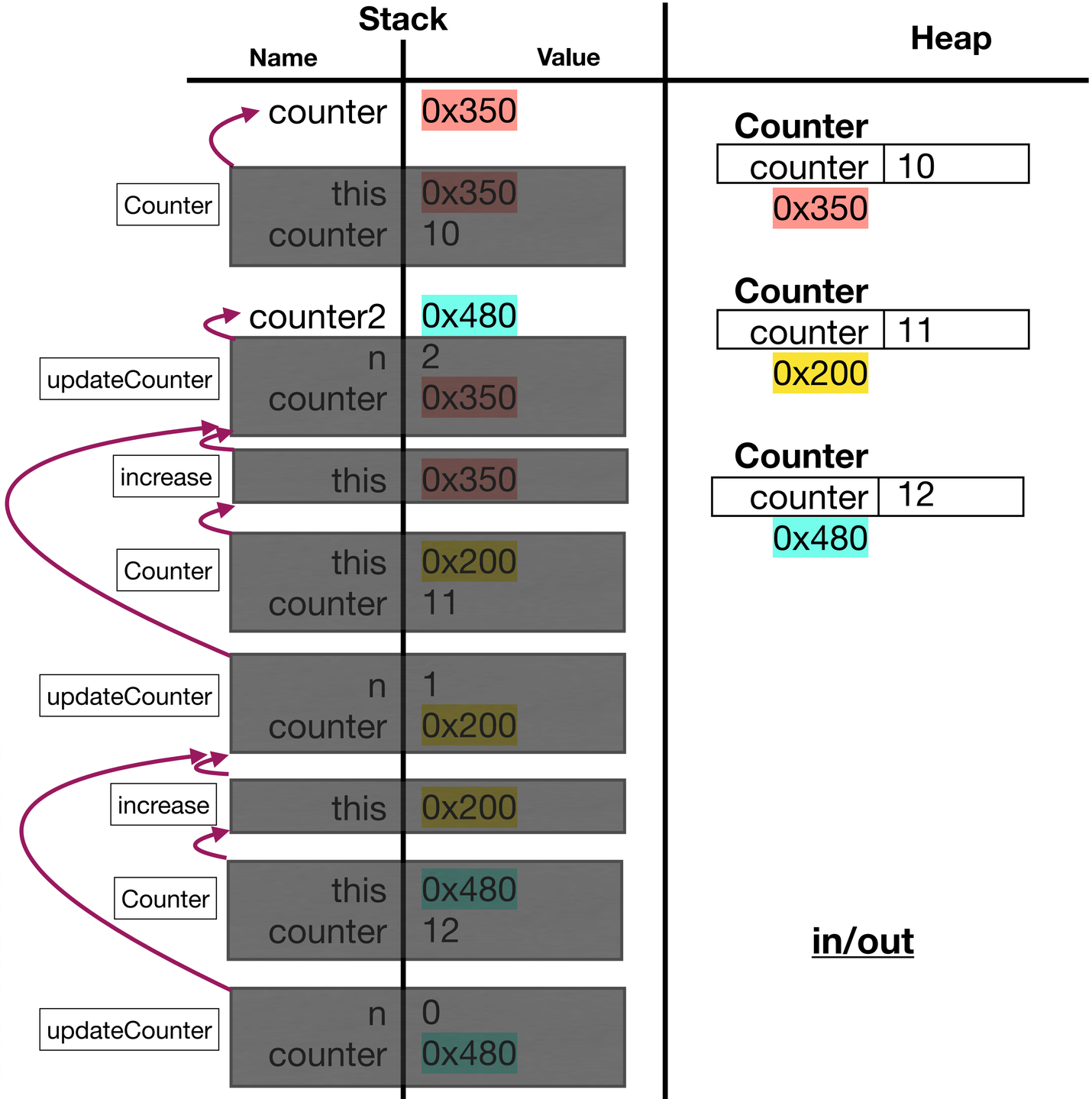

```scala
class Counter(counter: Int) {
 def printCount():Unit = {
    println(this.counter)
  }
  def increase(): Counter = {
    new Counter(this.counter + 1)
  }
}
```

```scala
def updateCounter(n: Int, counter: Counter): Counter = {
  if(n<=0) {
    counter
  } else {
    updateCounter(n-1, counter.increase())
  }
}

def main(args: Array[String]): Unit = {
  val counter: Counter = new Counter(10)
  val counter2: Counter = updateCounter(2, counter)

  counter.printCount()
  counter2.printCount()
}
```

- Print the values to the screen
- counter has a value 10
- counter2 has a value 12

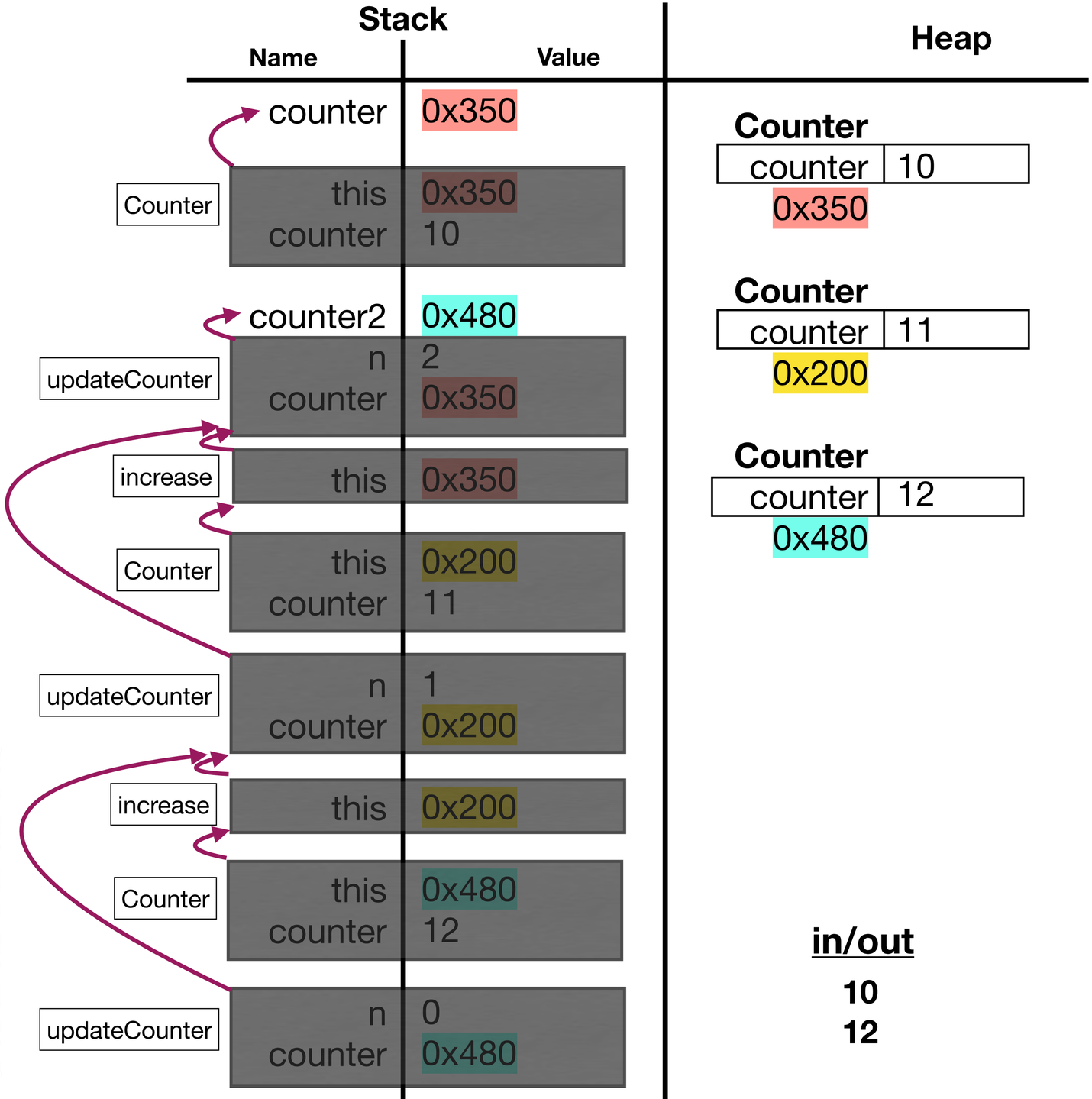

```scala
class Counter(counter: Int) {
 def printCount():Unit = {
    println(this.counter)
  }
  def increase(): Counter = {
    new Counter(this.counter + 1)
  }
}
```

```scala
def updateCounter(n: Int, counter: Counter): Counter = {
  if(n<=0) {
    counter
  } else {
    updateCounter(n-1, counter.increase())
  }
}

def main(args: Array[String]): Unit = {
  val counter: Counter = new Counter(10)
  val counter2: Counter = updateCounter(2, counter)

  counter.printCount()
  counter2.printCount()
}
```

- Note: Each time we needed to change a Counter, we created a new Counter object