Deployment Strategies

CSSE6400

Richard Thomas

May 11, 2026

Branching & Deployment Strategies

- Branching Strategies
- Deployment Strategies
  - Recreate Deployment
  - Rolling Deployment
  - Blue/Green Deployment
  - Canary Deployment
  - A/B Deployment
  - Shadow Deployment

Definition 0. Branching

Copying the trunk to allow separate and parallel development.

Branching Strategies

- GitHub Flow
- GitLab Flow
- Release Branches

GitHub Flow [Haddad, 2022]

- Main is always *deployable*
- Create branch
- Make changes
- Create pull request
- Resolve issues
- Merge pull request
- Delete branch

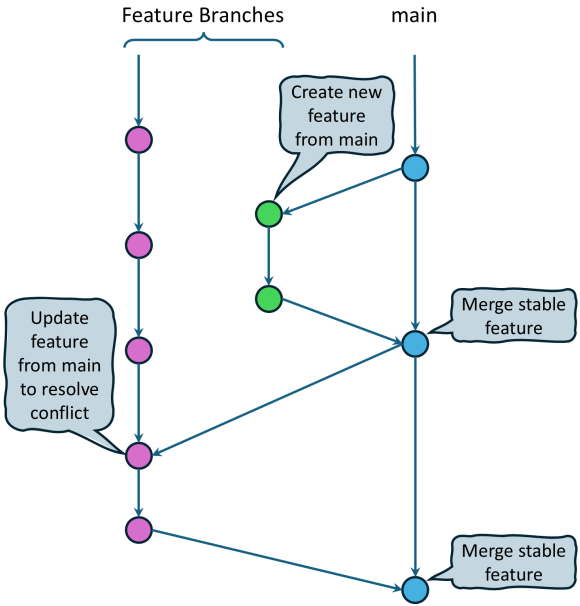

GitLab Flow [Saavedra, 2023]

- Supports deployment *windows*
  - Merge to production
  - Deploy when allowed
- Production branch
  - Plus alpha, beta, . . .
- Still have
  - Feature branches
  - Pull requests

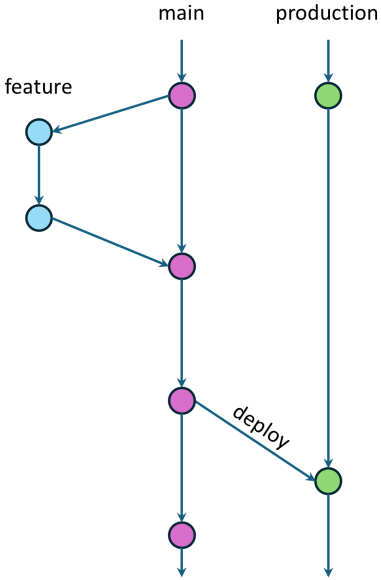

Release Branches [Saavedra, 2023]

- Supports multiple *versions* of system
- Feature development in main
- Released versions are branches
- Bug fixes in main
  - cherry-pick into branches

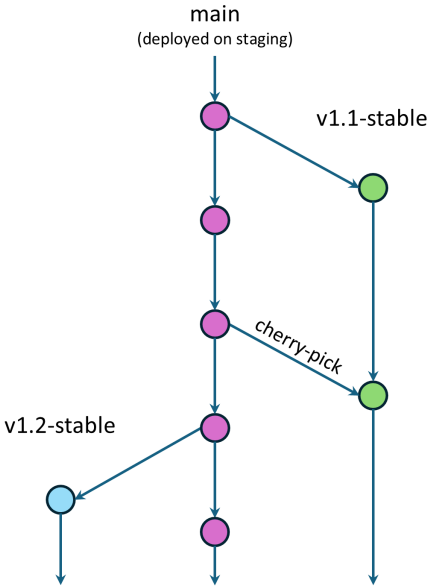

Definition 0. Deployment Strategy

How a software system is made available to clients.

Recreate Deployment [Tremel, 2017]

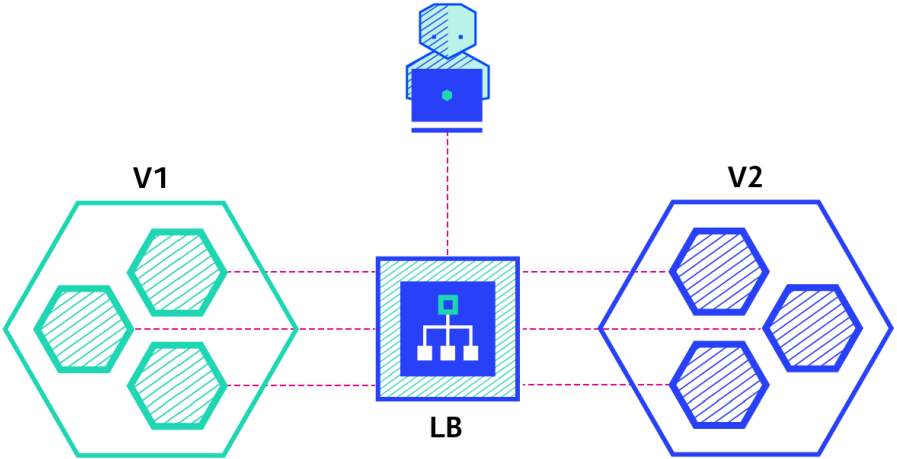

Recreate Deployment

Pros

- Easy
- Renewed state
  - App reinitialised
  - Persistent storage consistent with system version

Cons

- Downtime

Rolling Deployment [Tremel, 2017]

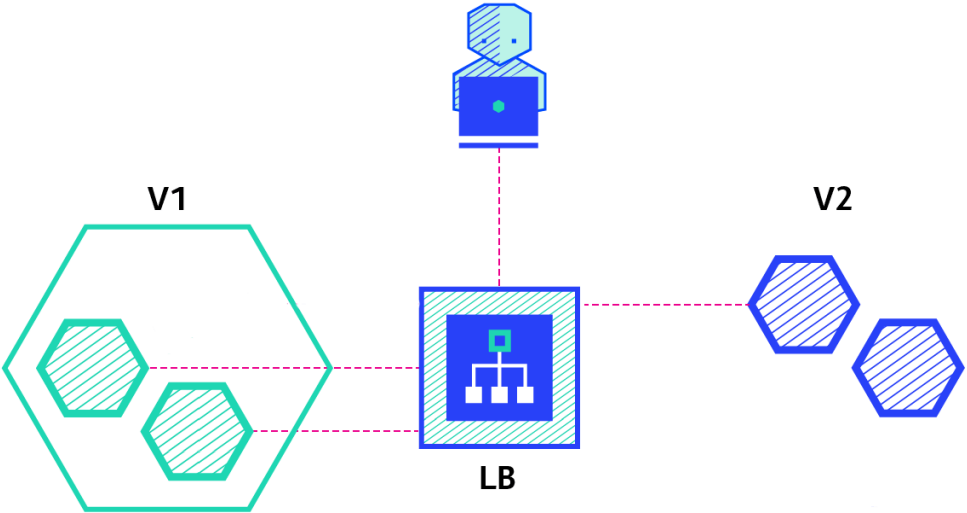

Rolling Deployment

Pros

- Fairly easy
- Slow release of new version
  - Observe issues
  - Rollback
- Stateful instances can finish gracefully
  - Instance is killed when inactive

Cons

- Time
- Support multiple APIs
- Support different versions of persistent data structure
- No control over traffic to different versions

Blue-Green Deployment [Tremel, 2017]

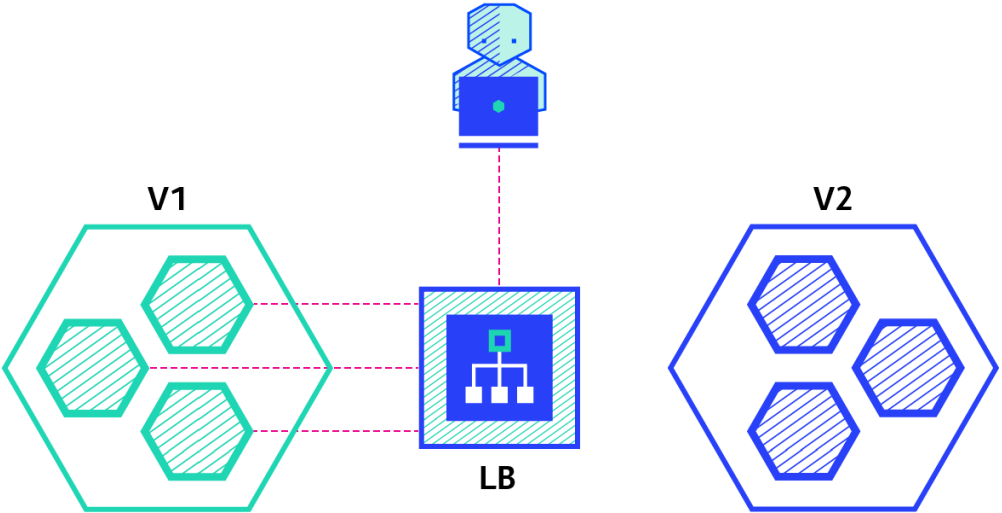

Blue-Green Deployment

Pros

- Instant release of new version
- Fast rollback if necessary
- Only one version 'live' at any time
  - No versioning conflicts

Cons

- Expensive
  - Double the infrastructure
- Stateful instance version switch difficult
  - Can't kill instance in middle of a transaction

Canary Deployment [Tremel, 2017]

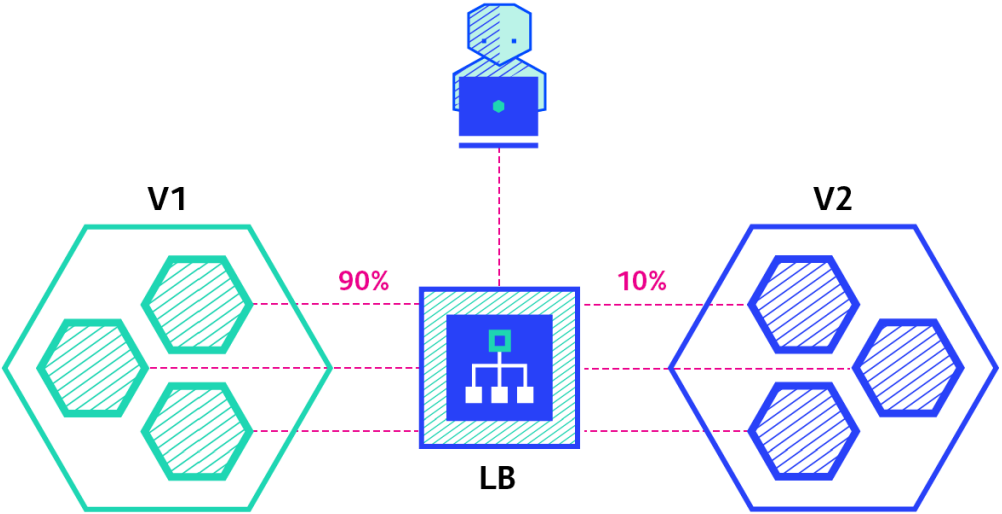

Canary Deployment

Pros

- New version released to subset of users
- Can monitor performance and error rates
- Easy and fast rollback

Cons

- Slow
- Implies poor testing

A/B Deployment [Tremel, 2017]

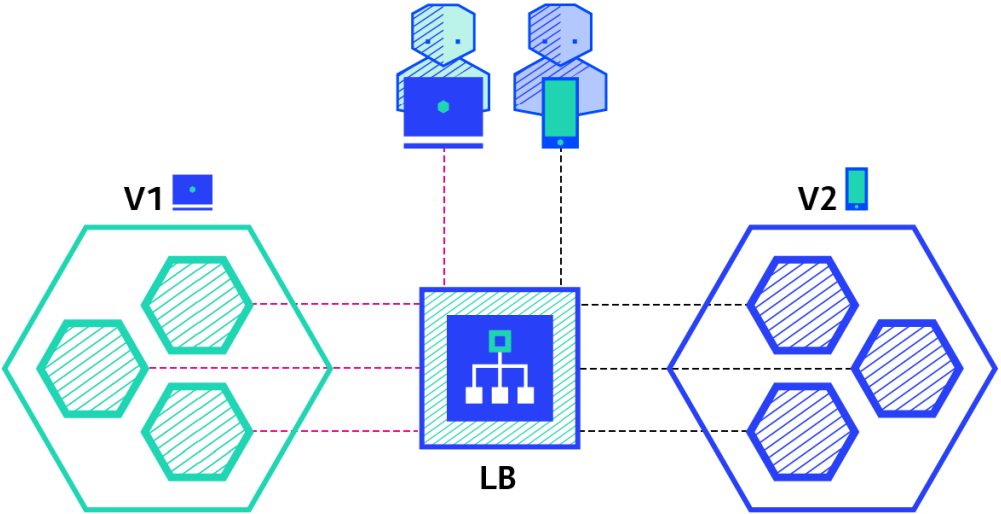

A/B Deployment

Pros

- Multiple versions run in parallel
- Full control over traffic distribution

Cons

- Needs intelligent load balancer
- Debugging a version is difficult
  - Need good logs & tools

Shadow Deployment [Tremel, 2017]

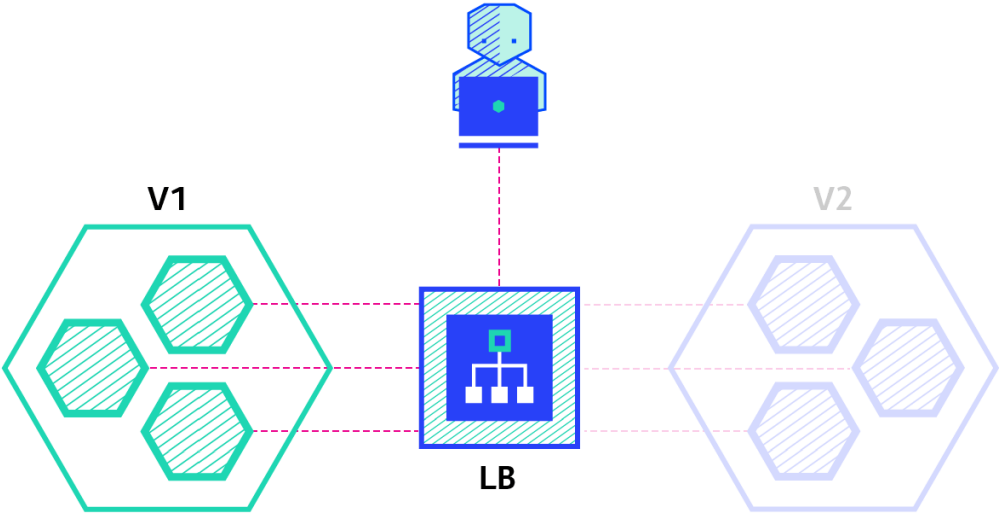

Shadow Deployment

Pros

- Performance testing with production traffic
- No impact on users

Cons

- Expensive
  - Double the infrastructure
- Complex to setup
  - Need mocks for external services

Deployment Strategy Options

- Staging or beta testing
  - Recreate or Rolling
- Production (Live)
  - Rolling or Blue/Green
- Uncertain of system stability
  - Canary
- Evaluation
  - A/B or Shadow

Deployment Considerations *[Tremel, 2017]*

Strategy	ZERO DOWNTIME	REAL TRAFFIC TESTING	TARGETED USERS	CLOUD COST	ROLLBACK DURATION	NEGATIVE IMPACT ON USER	COMPLEXITY OF SETUP
RECREATE version A is terminated then version B is rolled out	✗	✗	✗	■□□	■■■	■■■	□□□
RAMPED version B is slowly rolled out and replacing version A	✓	✗	✗	■□□	■■□	■□□	■□□
BLUE/GREEN version B is released alongside version A, then the traffic is switched to version B	✓	✗	✗	■■■	□□□	■■□	■■□
CANARY version B is released to a subset of users, then proceed to a full rollout	✓	✓	✗	■■□	■□□	■□□	■■□
A/B TESTING version B is released to a subset of users under specific condition	✓	✓	✓	■■□	■□□	■□□	■■■
SHADOW version B receives real world traffic alongside version A and doesn't impact the response	✓	✓	✗	■■■	□□□	□□□	■■■

References

[Haddad, 2022] Haddad, R. (2022).
What are the best git branching strategies.
https://faun.dev/c/stories/manuelherrera/git-branching-strategies-in-2022/.

[Saavedra, 2023] Saavedra, C. (2023).
Combine gitlab flow and gitlab duo for a workflow powerhouse.
https://about.gitlab.com/blog/2023/07/27/gitlab-flow-duo/.

[Tremel, 2017] Tremel, E. (2017).
Six strategies for application deployment.
https://thenewstack.io/deployment-strategies/.