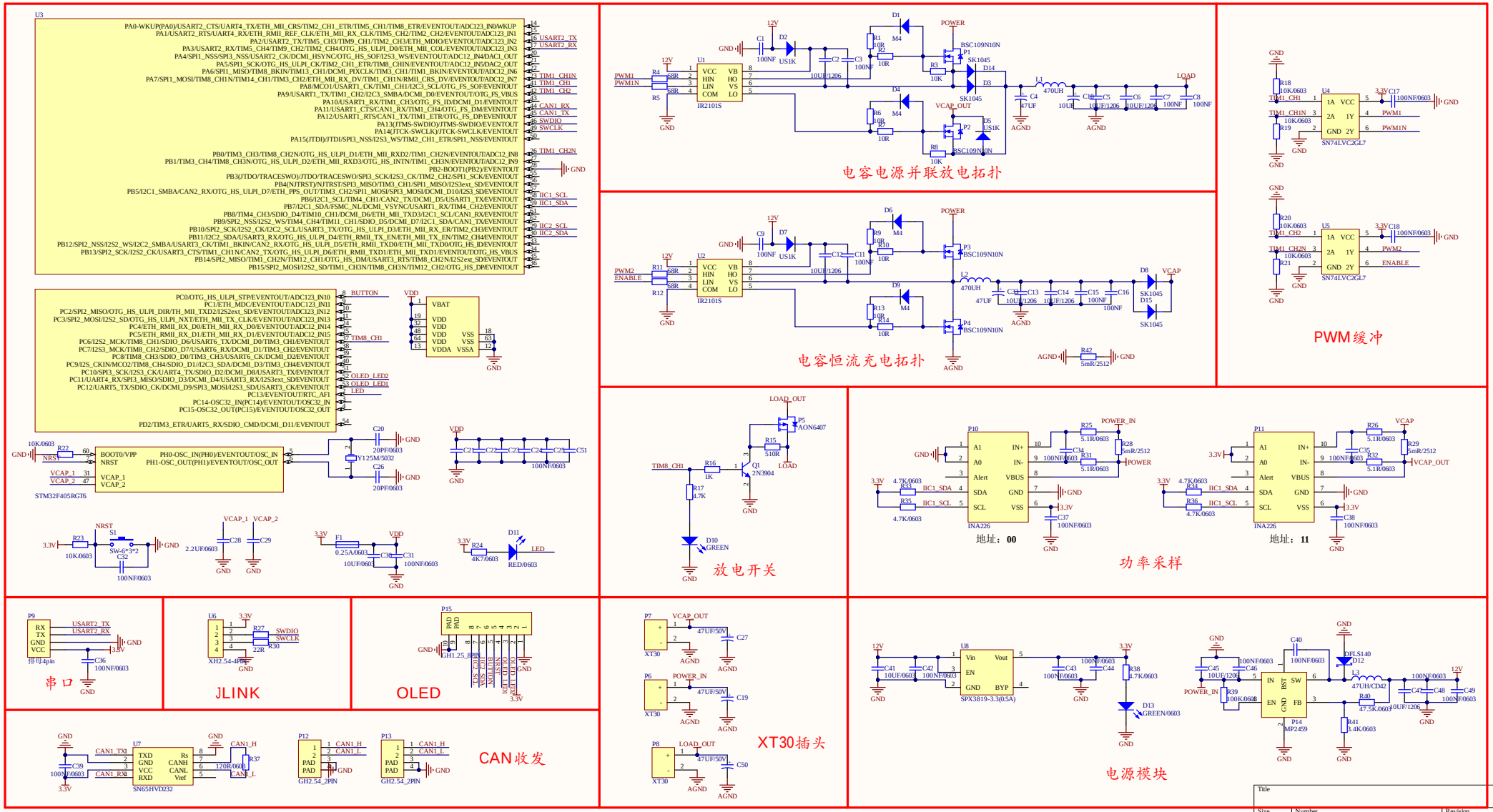

Title		
Size A3	Number	Revision
Date: 3/30/2022	Sheet of	
File: E:\FYT\..\超级电容V1.SchDoc	Drawn By:	