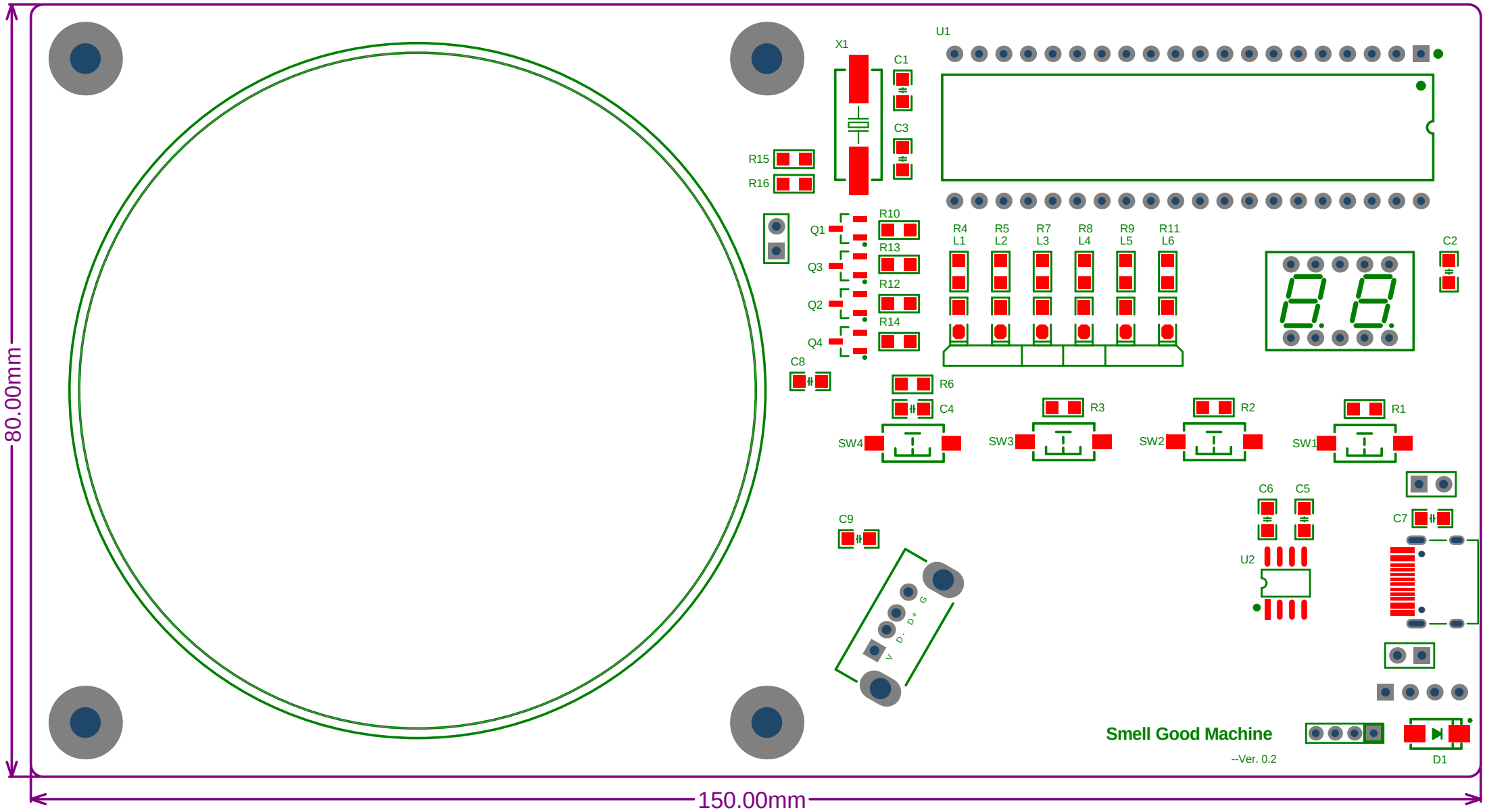
80.00mm
150.00mm
X1
C1
C3
U1
R15
R16
Q1
Q3
Q2
Q4
R10
R13
R12
R14
R4
L1
R5
L2
R7
L3
R8
L4
R9
L5
R11
L6
C2
C8
R6
C4
R3
R2
R1
SW4
SW3
SW2
SW1
C6
C5
C7
C9
U2
V
D-
D+
G
Smell Good Machine
--Ver. 0.2
D1

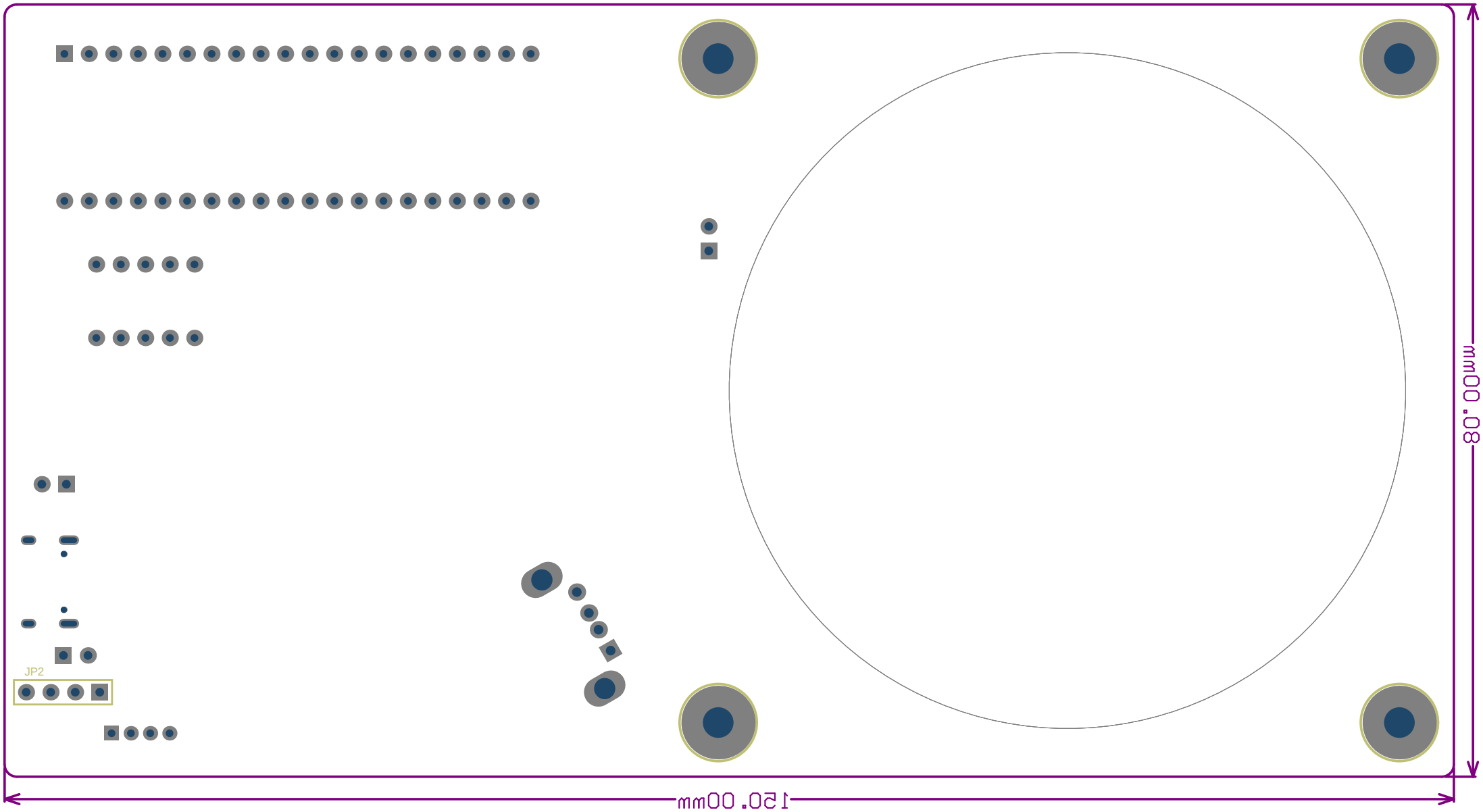
JP2
80.00mm
150.00mm

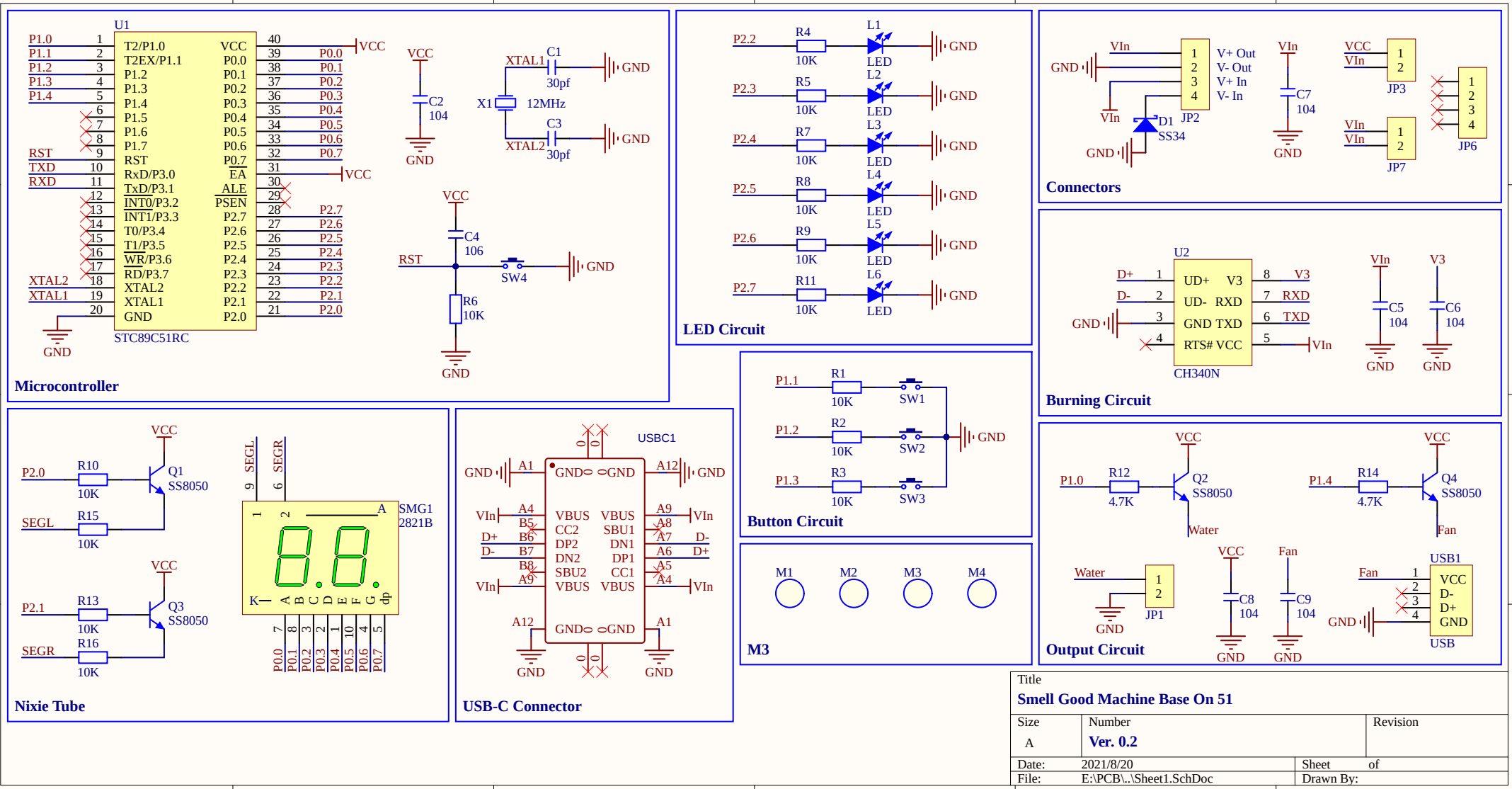
Microcontroller
U1
STC89C51RC
T2/P1.0
T2EX/P1.1
P1.2
P1.3
P1.4
P1.5
P1.6
P1.7
RST
RxD/P3.0
TxD/P3.1
INT0/P3.2
INT1/P3.3
T0/P3.4
T1/P3.5
WR/P3.6
RD/P3.7
XTAL2
XTAL1
GND
VCC
P0.0
P0.1
P0.2
P0.3
P0.4
P0.5
P0.6
P0.7
EA
ALE
PSEN
P2.7
P2.6
P2.5
P2.4
P2.3
P2.2
P2.1
P2.0
C1
30pf
C2
104
C3
30pf
X1
12MHz
C4
106
R6
10K
SW4
LED Circuit
R4
R5
R7
R8
R9
R11
10K
L1
L2
L3
L4
L5
L6
LED
Connectors
VIn
V+ Out
V- Out
V+ In
V- In
JP2
D1
SS34
C7
104
JP3
JP7
JP6
Burning Circuit
U2
CH340N
D+
D-
UD+
UD-
GND
RTS#
V3
RXD
TXD
C5
104
C6
104
Button Circuit
P1.1
P1.2
P1.3
R1
R2
R3
SW1
SW2
SW3
M1
M2
M3
M4
Nixie Tube
P2.0
P2.1
SEGL
SEGR
R10
R13
R15
R16
Q1
Q3
SS8050
SMG1
2821B
K
A
B
C
D
E
F
G
dp
USB-C Connector
USBC1
VBUS
CC2
DP2
DN2
SBU2
CC1
SBU1
DN1
DP1
Output Circuit
P1.0
P1.4
R12
R14
4.7K
Q2
Q4
Water
Fan
JP1
C8
104
C9
104
USB1
USB
Title
Smell Good Machine Base On 51
Size
A
Number
Ver. 0.2
Revision
Date: 2021/8/20
Sheet of
File: E:\PCB\..\Sheet1.SchDoc
Drawn By: