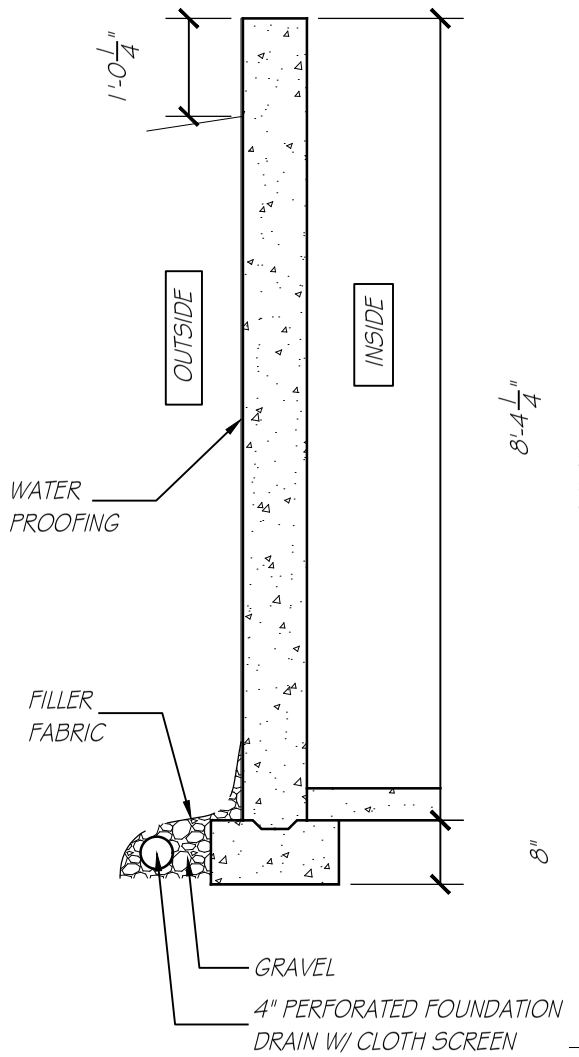

Foundation Detail

SCALE: 1/2" = 1'-0"

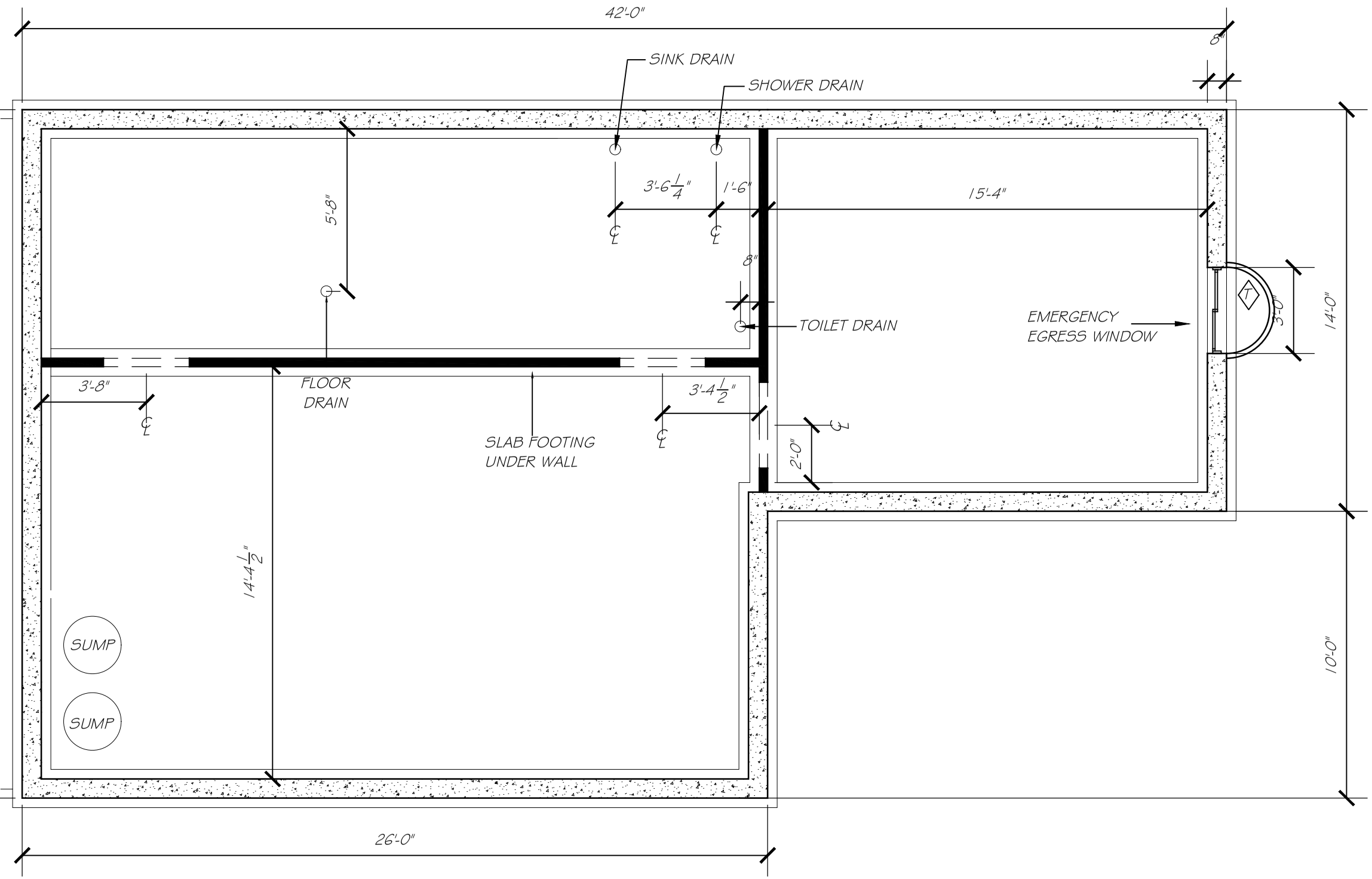

Foundation Plan

SCALE: 1/4" = 1'-0"

All intellectual property rights regarding this home design are retained by the University of Notre Dame for the sole use of Habitat for Humanity per agreement

#	Date	Issue
01	xx/xx/23	First Issue

Rob Baranko, Frances Harrington, Christina Sieben

Colonial House

ARCH 41121 - Design Studio VI
Spring Semester 2023

A1.6