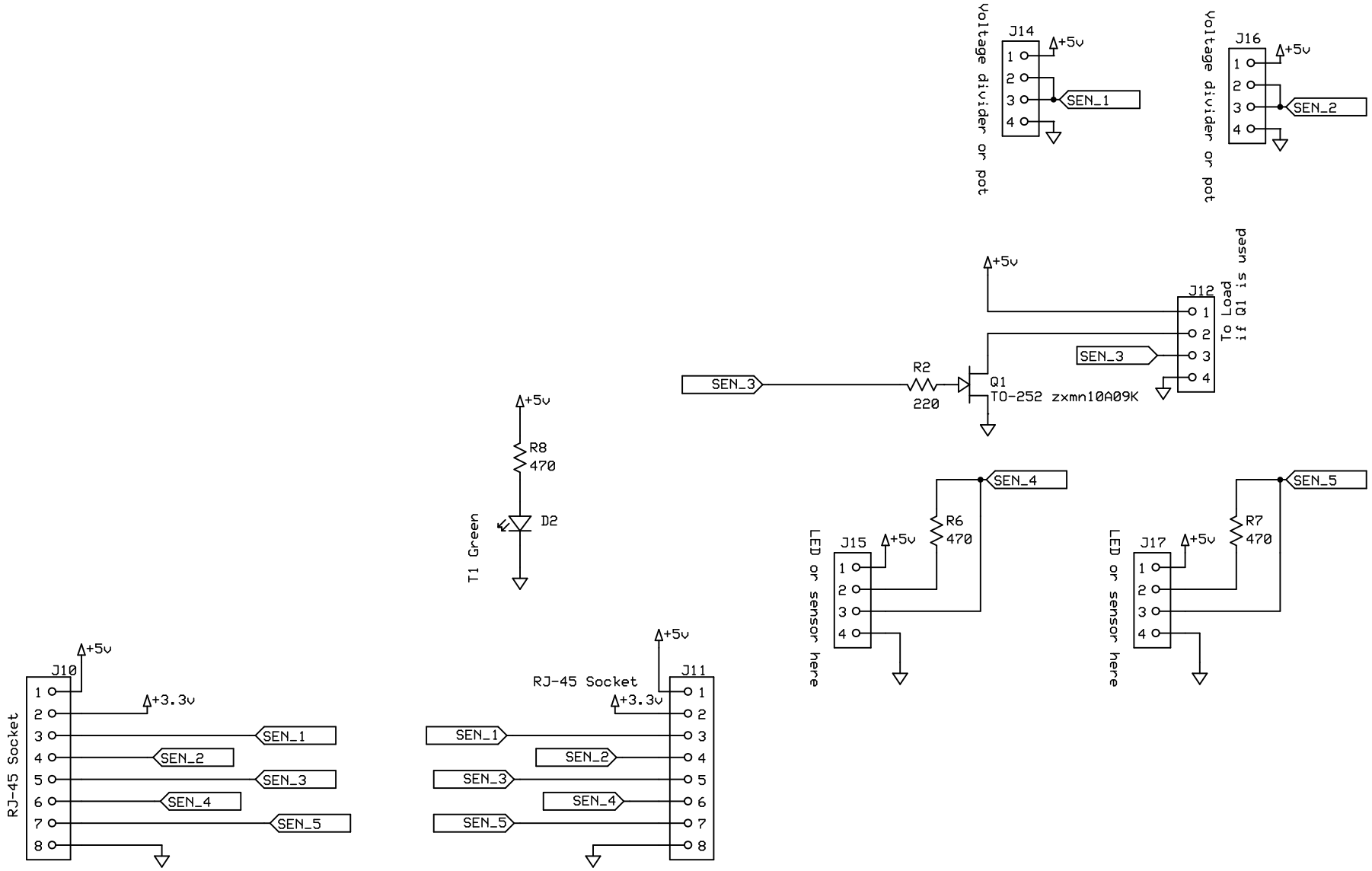

Cultural Technonolgy Development Lab		
Museduino v2.0		
S. Cohen	Rev 2.0 06/01/2015	Page 2(3)