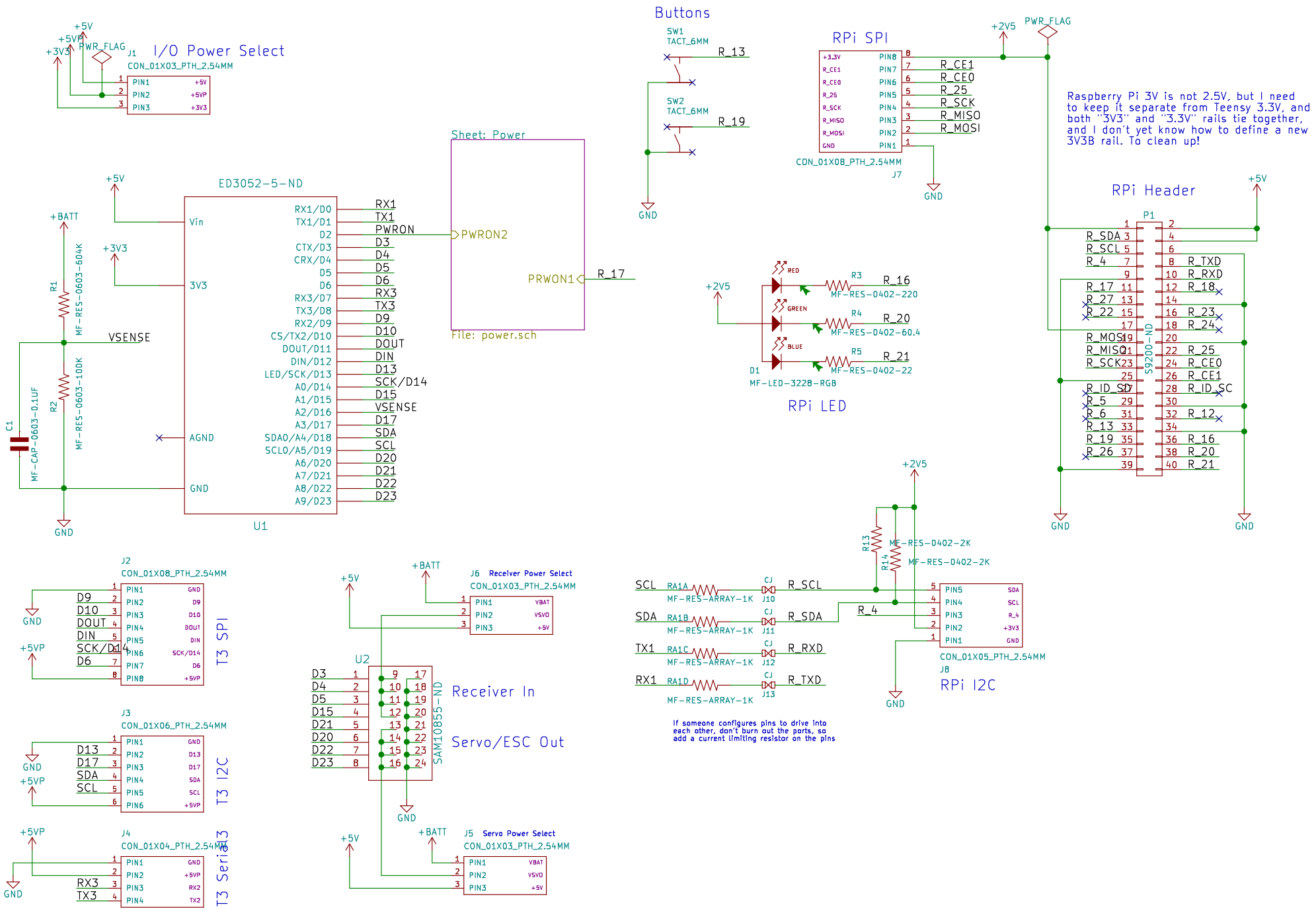
I/O Power Select
J1
CON_01X03_PTH_2.54MM
+5V
+5VP
+3V3
PWR_FLAG
ED3052-5-ND
U1
Vin
3V3
AGND
GND
+BATT
+5V
+3V3
R1
MF-RES-0603-604K
R2
MF-RES-0603-100K
C1
MF-CAP-0603-0.1UF
VSENSE
RX1/D0
TX1/D1
D2
CTX/D3
CRX/D4
D5
D6
RX3/D7
TX3/D8
RX2/D9
CS/TX2/D10
DOUT/D11
DIN/D12
LED/SCK/D13
A0/D14
A1/D15
A2/D16
A3/D17
SDA0/A4/D18
SCL0/A5/D19
A6/D20
A7/D21
A8/D22
A9/D23
RX1
TX1
PWRON
D3
D4
D5
D6
RX3
TX3
D9
D10
DOUT
DIN
D13
SCK/D14
D15
VSENSE
D17
SDA
SCL
D20
D21
D22
D23
Sheet: Power
PWRON2
PRWON1
R_17
File: power.sch
Buttons
SW1
TACT_6MM
R_13
SW2
TACT_6MM
R_19
GND
RPi SPI
+2V5
PWR_FLAG
R_CE1
R_CE0
R_25
R_SCK
R_MISO
R_MOSI
CON_01X08_PTH_2.54MM
J7
Raspberry Pi 3V is not 2.5V, but I need to keep it separate from Teensy 3.3V, and both "3V3" and "3.3V" rails tie together, and I don't yet know how to define a new 3V3B rail. To clean up!
RPi Header
P1
S9200-ND
R_SDA
R_SCL
R_4
R_TXD
R_RXD
R_17
R_18
R_27
R_22
R_23
R_24
R_MOSI
R_MISO
R_SCK
R_25
R_CE0
R_CE1
R_ID_SD
R_ID_SC
R_5
R_6
R_12
R_13
R_19
R_16
R_20
R_21
RPi LED
RED
GREEN
BLUE
R3
R4
R5
R_16
R_20
R_21
MF-RES-0402-220
MF-RES-0402-60.4
MF-RES-0402-22
D1
MF-LED-3228-RGB
J2
CON_01X08_PTH_2.54MM
D9
D10
DOUT
DIN
SCK/D14
D6
T3 SPI
J3
CON_01X06_PTH_2.54MM
D13
D17
SDA
SCL
T3 I2C
J4
CON_01X04_PTH_2.54MM
RX3
TX3
T3 Serial3
J6 Receiver Power Select
CON_01X03_PTH_2.54MM
VBAT
VSVO
+5V
U2
SAM10855-ND
D3
D4
D5
D15
D21
D20
D22
D23
Receiver In
Servo/ESC Out
J5 Servo Power Select
CON_01X03_PTH_2.54MM
R13
R14
MF-RES-0402-2K
MF-RES-0402-2K
SCL
SDA
TX1
RX1
RA1A
RA1B
RA1C
RA1D
MF-RES-ARRAY-1K
J10
J11
J12
J13
R_SCL
R_SDA
R_RXD
R_TXD
R_4
CON_01X05_PTH_2.54MM
J8
RPi I2C
If someone configures pins to drive into each other, don't burn out the parts, so add a current limiting resistor on the pins

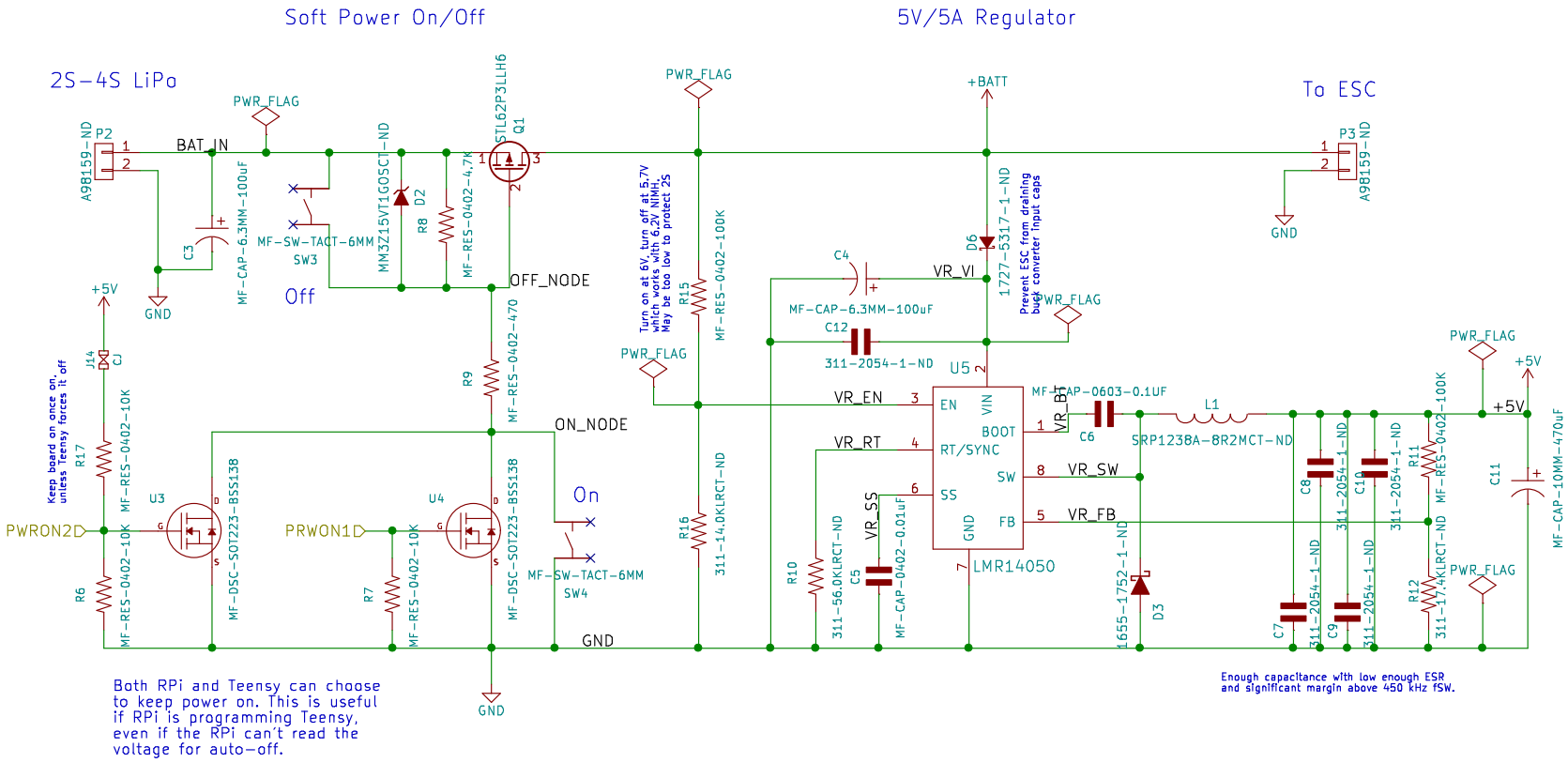


J9
CON_01X05_PTH_2.54MM

| | | | |
|---|---|---|---|
| GND | 1 | PIN1 | GND |
| ON_NODE | 2 | PIN2 | ON_NODE |
| +5V | 3 | PIN3 | +5V |
| OFF_NODE | 4 | PIN4 | OFF_NODE |
| BAT_IN | 5 | PIN5 | BAT_IN |