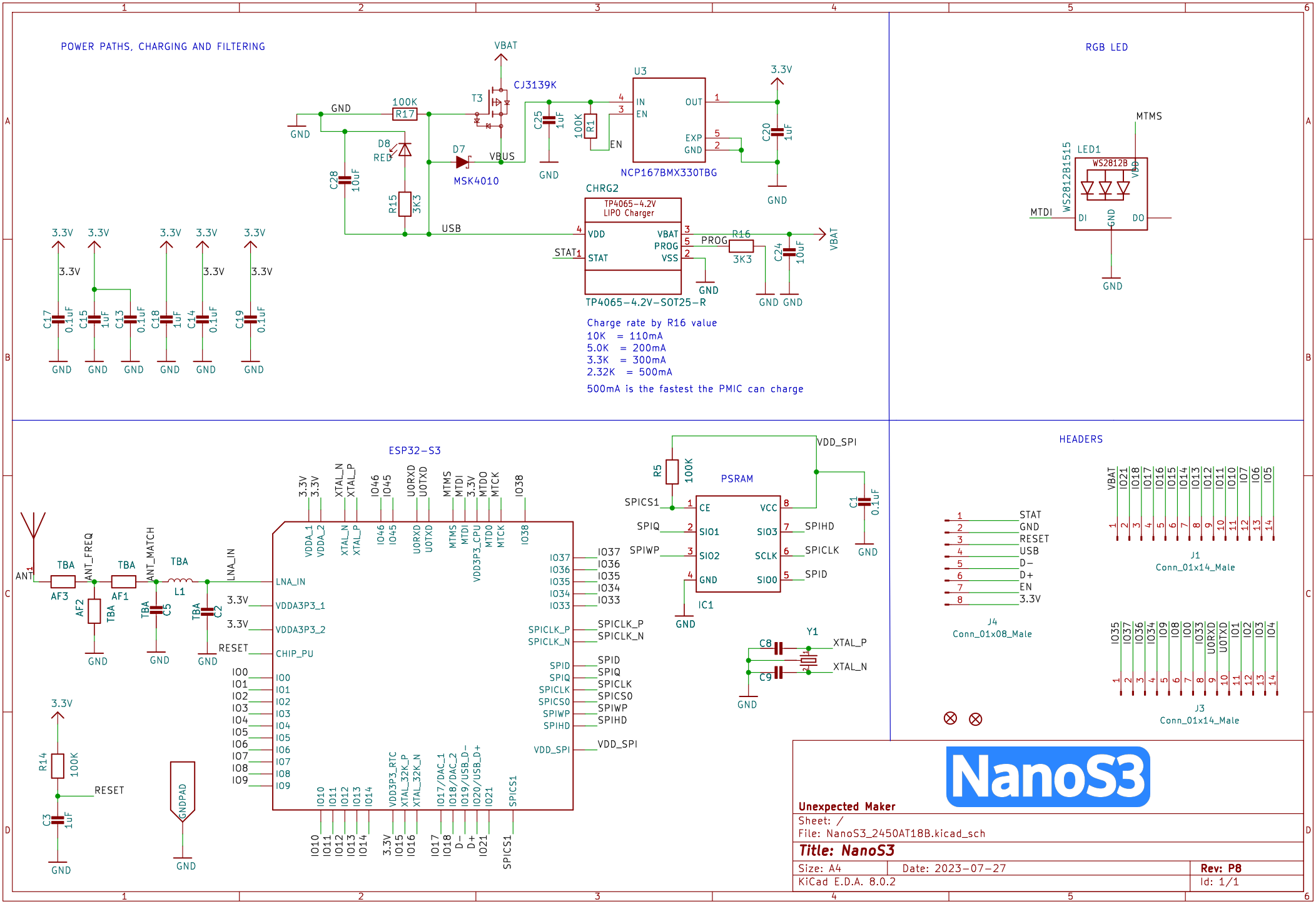
POWER PATHS, CHARGING AND FILTERING
VBAT
CJ3139K
T3
GND
100K
R17
D8
RED
D7
MSK4010
VBUS
C25
1uF
100K
R1
EN
U3
IN
EN
OUT
EXP
GND
NCP167BMX330TBG
3.3V
C20
1uF
C28
10uF
R15
3K3
USB
CHRG2
TP4065-4.2V
LIPO Charger
VDD
STAT
VBAT
PROG
VSS
PROG
R16
3K3
C24
10uF
STAT
TP4065-4.2V-SOT25-R
Charge rate by R16 value
10K = 110mA
5.0K = 200mA
3.3K = 300mA
2.32K = 500mA
500mA is the fastest the PMIC can charge
C17 0.1uF
C15 1uF
C13 0.1uF
C18 1uF
C14 0.1uF
C19 0.1uF
RGB LED
MTMS
LED1
WS2812B
WS2812B1515
MTDI
DI
GND
DO
ESP32-S3
ANT
TBA
AF3
ANT_FREQ
AF2
AF1
ANT_MATCH
L1
LNA_IN
C5
C2
RESET
CHIP_PU
VDDA3P3_1
VDDA3P3_2
VDDA_1
VDDA_2
XTAL_N
XTAL_P
I046
I045
U0RXD
U0TXD
MTMS
MTDI
VDD3P3_CPU
MTDO
MTCK
I038
I037
I036
I035
I034
I033
SPICLK_P
SPICLK_N
SPID
SPIQ
SPICLK
SPICS0
SPIWP
SPIHD
VDD_SPI
I00
I01
I02
I03
I04
I05
I06
I07
I08
I09
I010
I011
I012
I013
I014
VDD3P3_RTC
XTAL_32K_P
XTAL_32K_N
I017/DAC_1
I018/DAC_2
I019/USB_D-
I020/USB_D+
I021
SPICS1
D-
D+
R14
100K
C3
1uF
GNDPAD
PSRAM
R5
100K
SPICS1
SPIQ
SPIWP
CE
SIO1
SIO2
GND
VCC
SIO3
SCLK
SIO0
SPIHD
SPICLK
SPID
IC1
C1
0.1uF
Y1
C8
C9
XTAL_P
XTAL_N
HEADERS
STAT
GND
RESET
USB
D-
D+
EN
3.3V
J4
Conn_01x08_Male
VBAT
I021
I018
I017
I016
I015
I014
I013
I012
I011
I010
I07
I06
I05
J1
Conn_01x14_Male
I035
I037
I036
I034
I09
I08
I00
I033
U0RXD
U0TXD
I01
I02
I03
I04
J3
Conn_01x14_Male
NanoS3
Unexpected Maker
Sheet: /
File: NanoS3_2450AT18B.kicad_sch
Title: NanoS3
Size: A4
Date: 2023-07-27
Rev: P8
KiCad E.D.A. 8.0.2
Id: 1/1