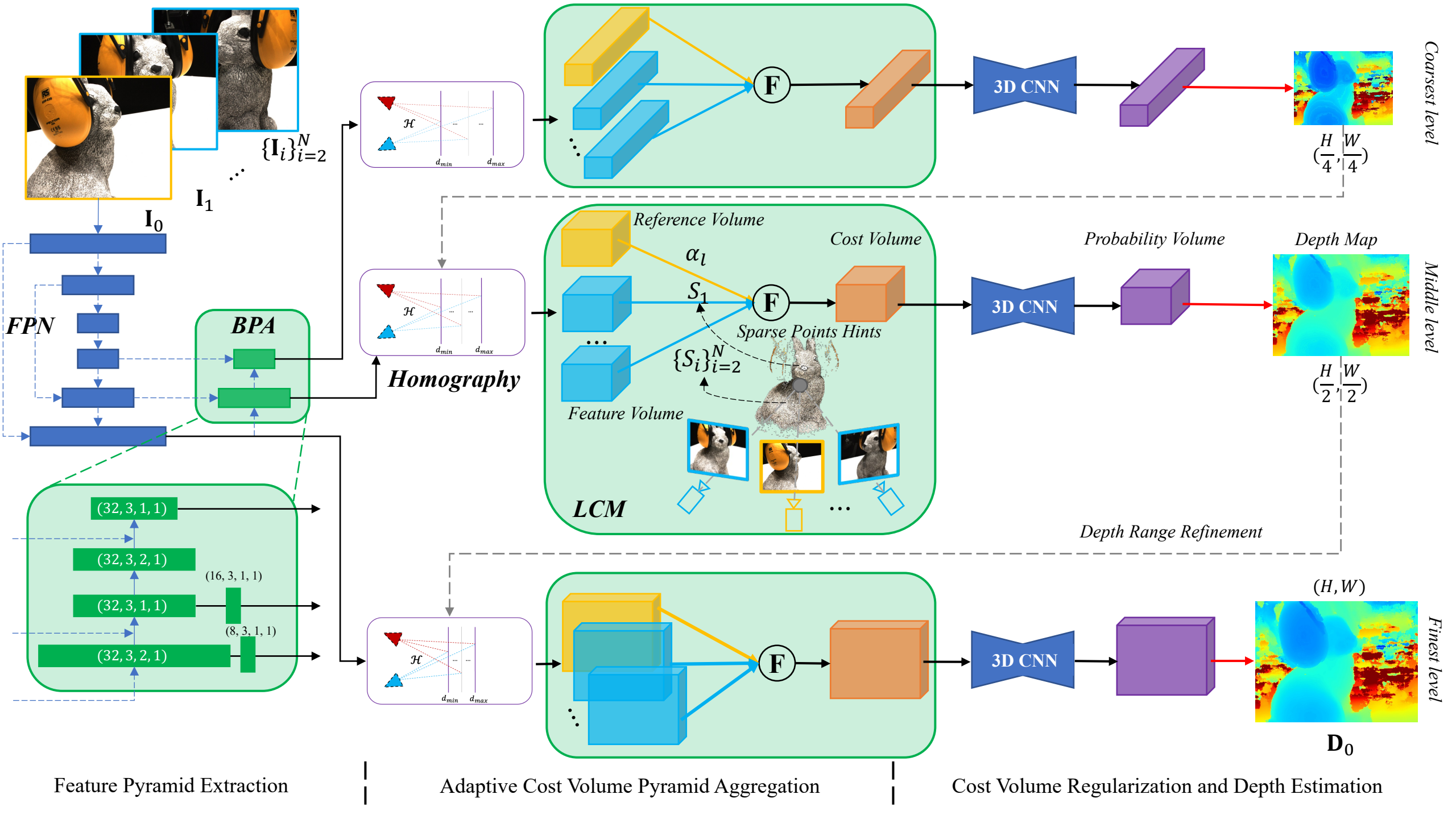
$\{\mathbf{I}_i\}_{i=2}^N$
$\mathbf{I}_1$
$\mathbf{I}_0$
FPN
BPA
(32, 3, 1, 1)
(32, 3, 2, 1)
(16, 3, 1, 1)
(32, 3, 1, 1)
(8, 3, 1, 1)
(32, 3, 2, 1)
$\mathcal{H}$
d_{min}
d_{max}
Homography
F
3D CNN
Coarsest level
$(\frac{H}{4}, \frac{W}{4})$
Reference Volume
Cost Volume
α_l
S_1
Sparse Points Hints
$\{S_i\}_{i=2}^N$
Feature Volume
LCM
Probability Volume
Depth Map
Middle level
$(\frac{H}{2}, \frac{W}{2})$
Depth Range Refinement
(H, W)
Finest level
$\mathbf{D}_0$
Feature Pyramid Extraction
Adaptive Cost Volume Pyramid Aggregation
Cost Volume Regularization and Depth Estimation