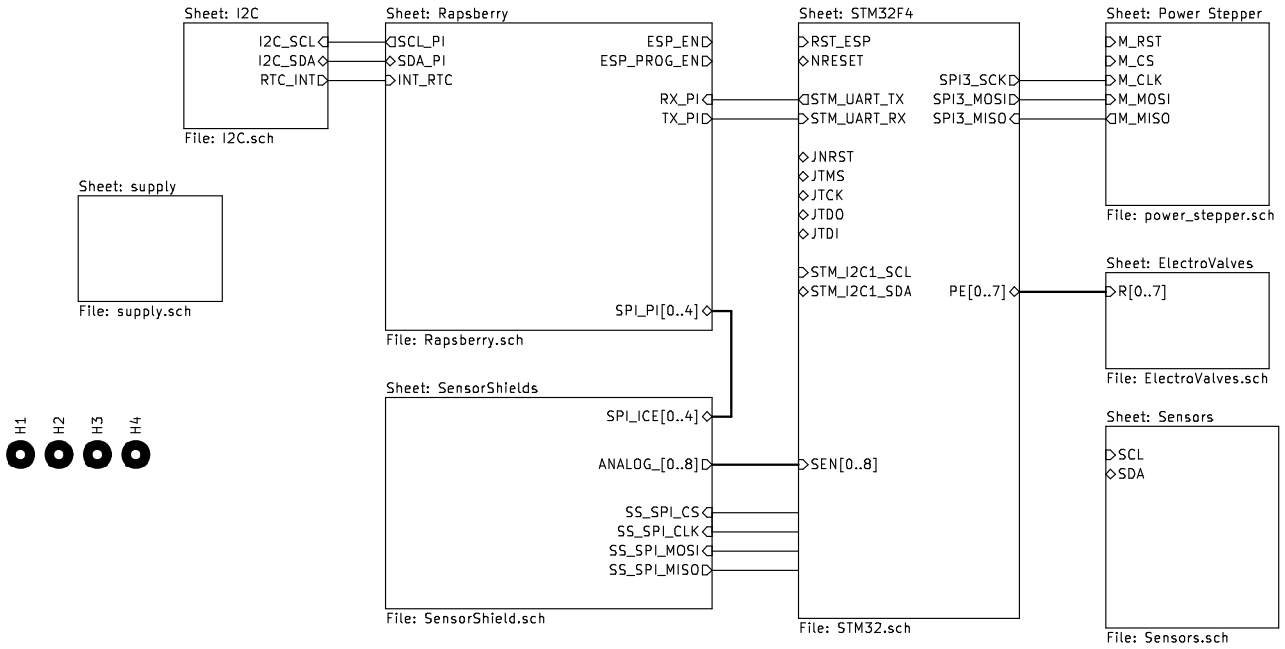

Sheet: /
File: keep_breathing_ctrl.sch

Title:

Size: A4	Date:	**Rev:**
KiCad E.D.A. kicad 5.1.5-52549c586ubuntu16.04.1		Id: 1/9

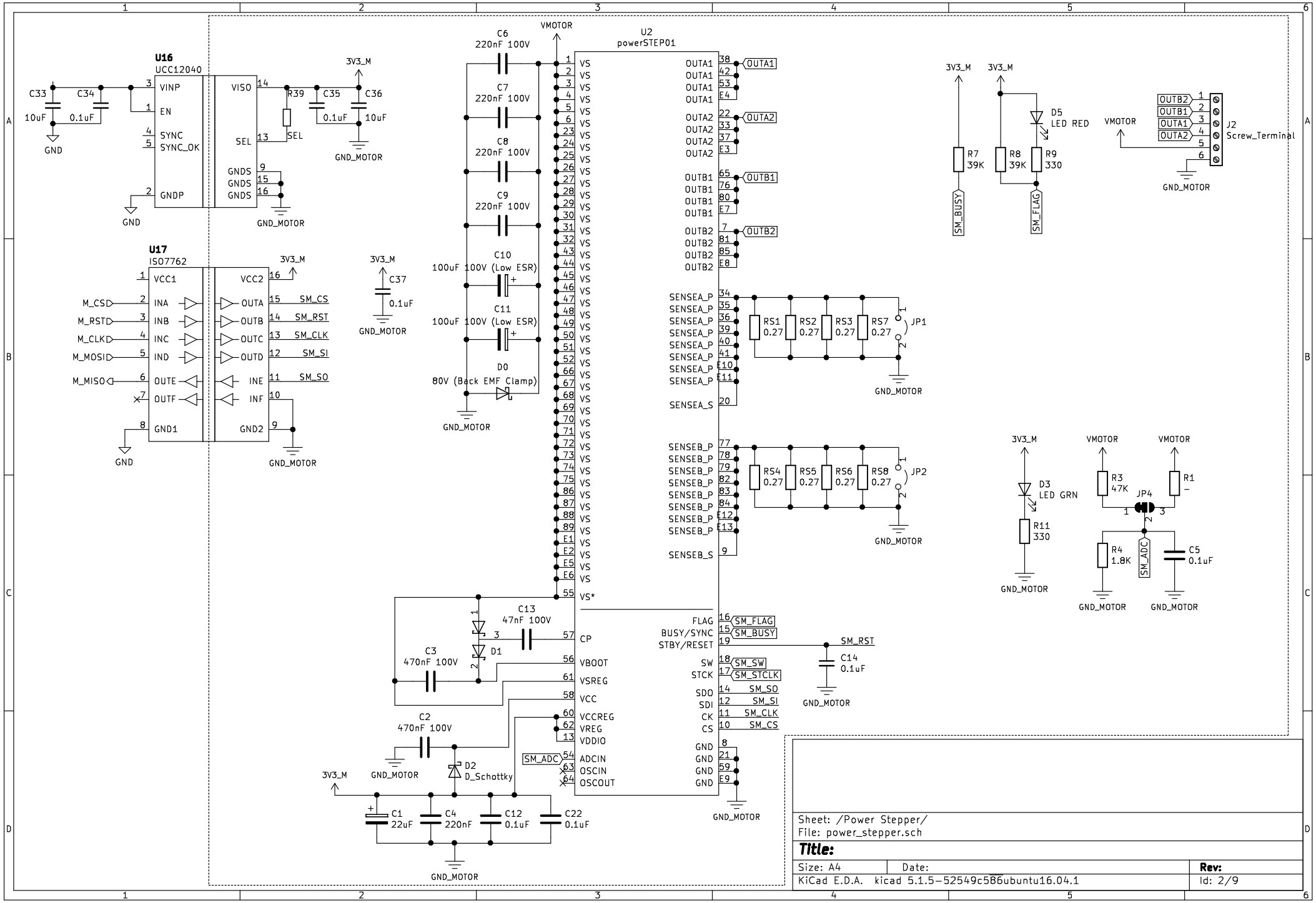

Sheet: /Power Stepper/
File: power_stepper.sch

Title:

Size: A4	Date:	Rev:
KiCad E.D.A. kicad 5.1.5-52549c586ubuntu16.04.1		Id: 2/9

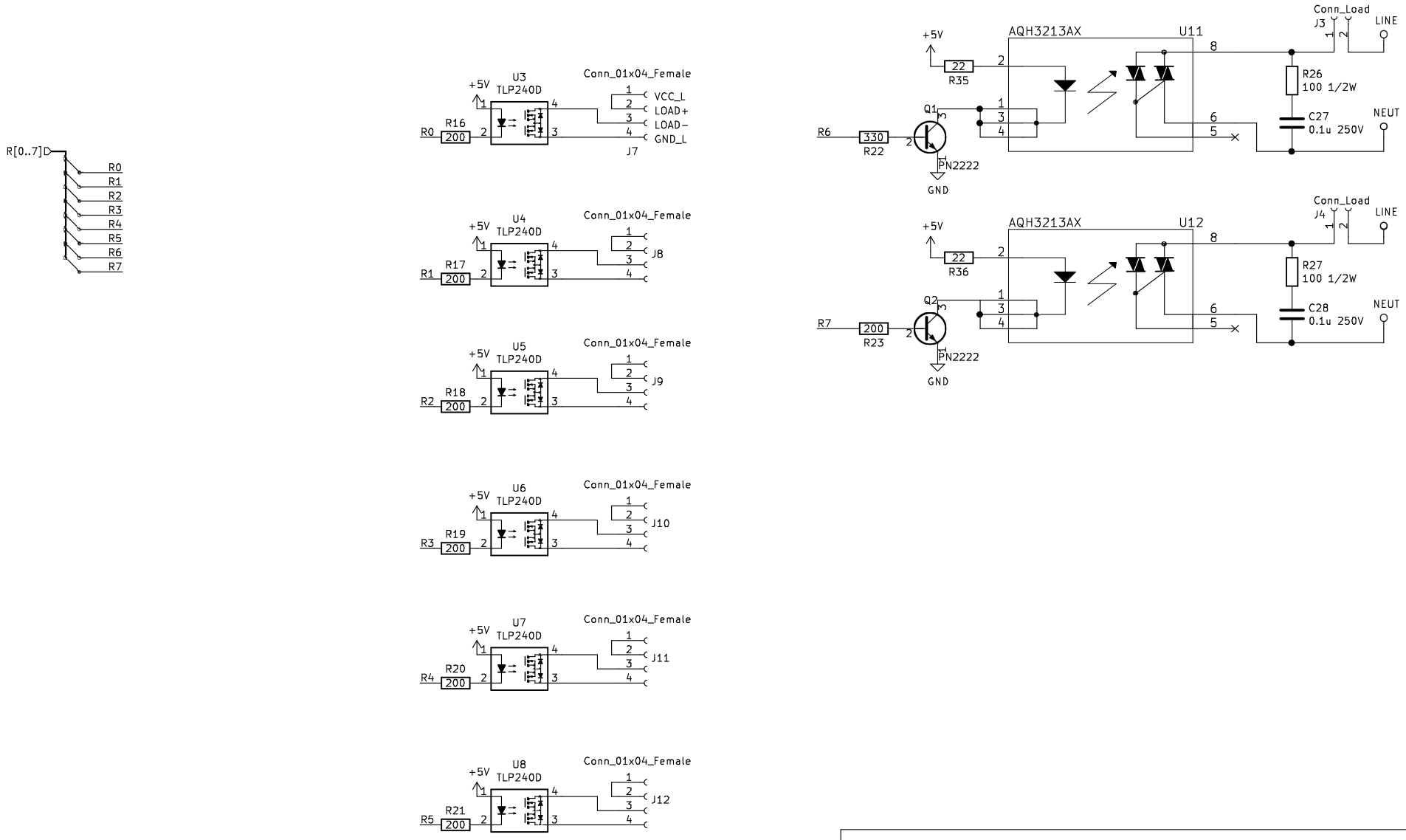

Sheet: /ElectroValves/
File: ElectroValves.sch

Title:

Size: A4	Date:	Rev:
KiCad E.D.A. kicad 5.1.5-52549c5~86ubuntu16.04.1		Id: 3/9

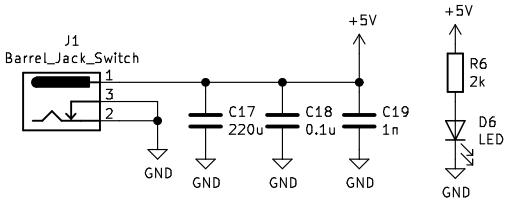

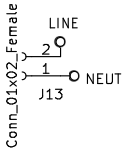

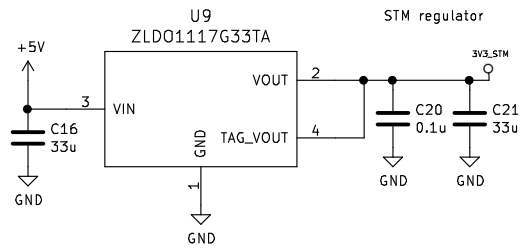

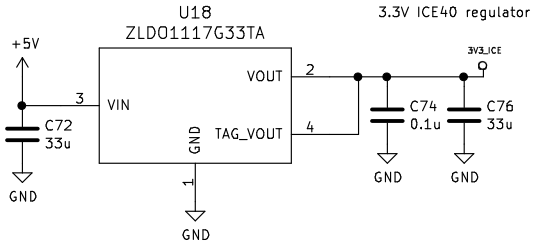

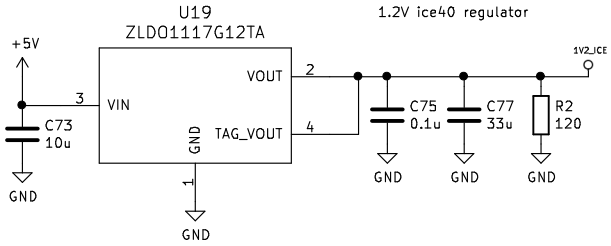

Sheet: /supply/
File: supply.sch

Title:

Size: A4	Date:	**Rev:**
KiCad E.D.A. kicad 5.1.5-52549c586ubuntu16.04.1		Id: 4/9

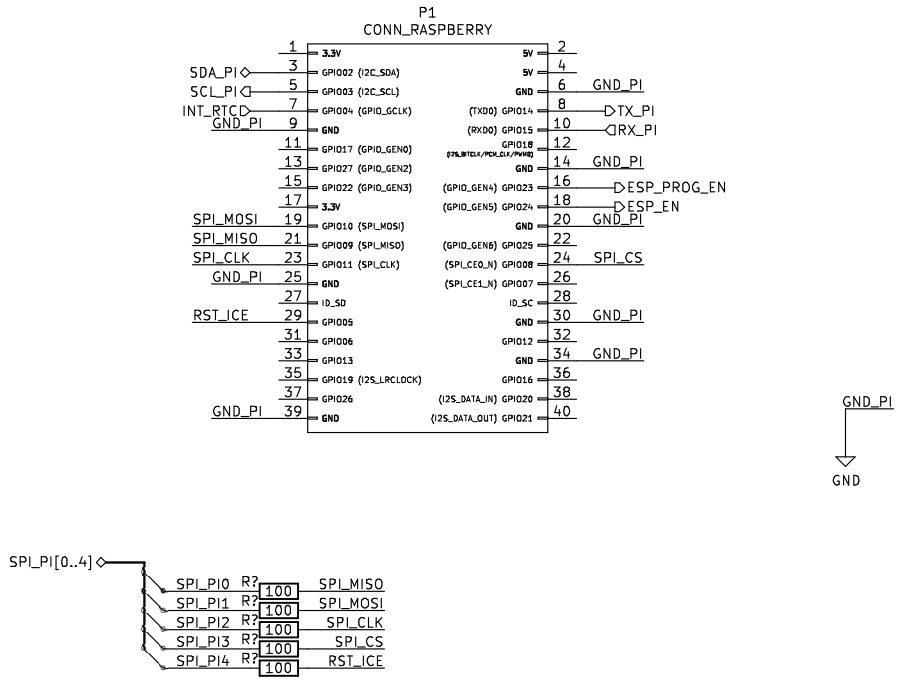

Sheet: /Rapsberry/
File: Rapsberry.sch

Title:

Size: A4	Date:	Rev:
KiCad E.D.A. kicad 5.1.5-52549c5~6ubuntu16.04.1		Id: 5/9

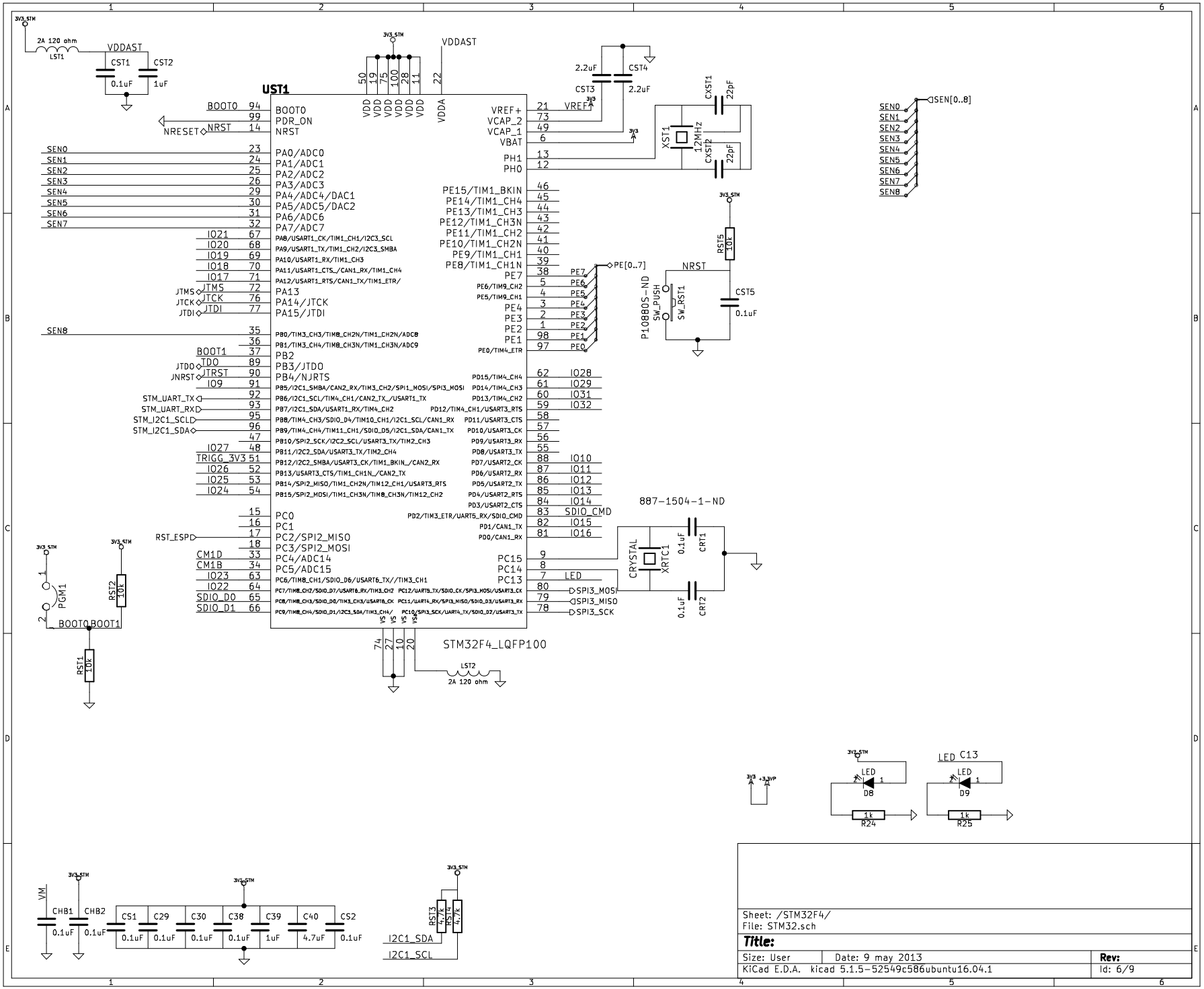

Sheet: /STM32F4/
File: STM32.sch

Title:

Size: User	Date: 9 may 2013	Rev:
KiCad E.D.A. kicad 5.1.5-52549c586ubuntu16.04.1		Id: 6/9

Pressure Sensor with Altimetry

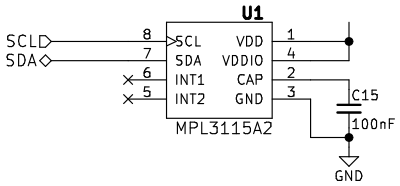

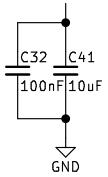

Humidity Sensor

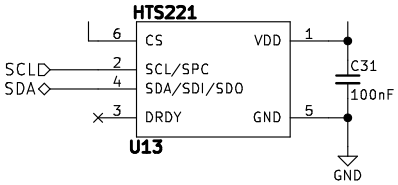

UN

Sheet: /Sensors/
File: Sensors.sch

Title: Open Controller V1.0

Size: A4	Date: 2020-04-16	**Rev: V2**
KiCad E.D.A. kicad 5.1.5-52549c586ubuntu16.04.1		Id: 7/9

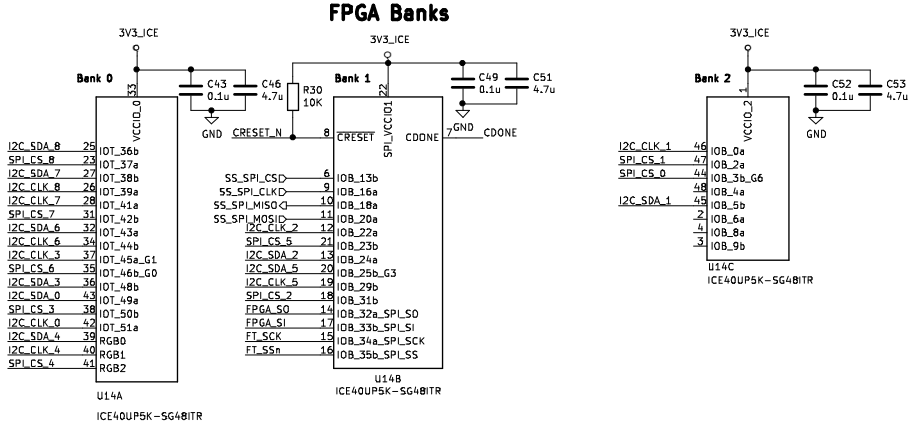

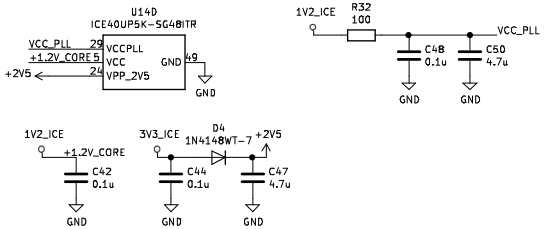

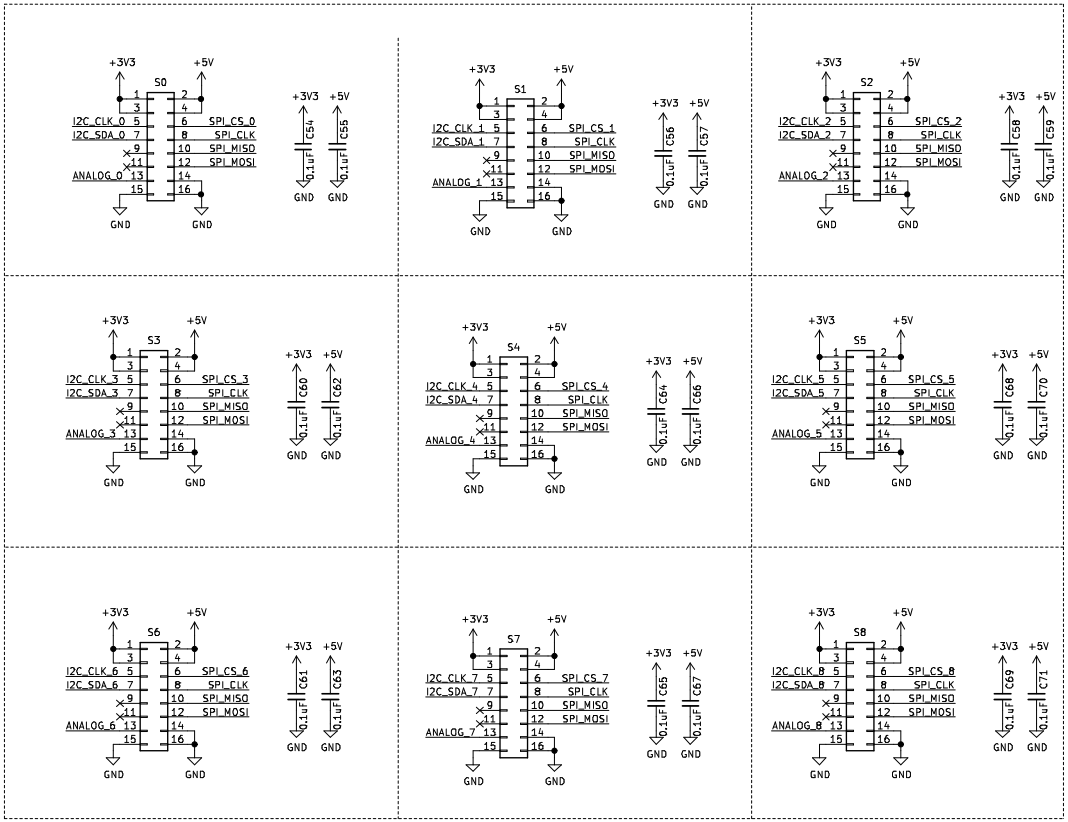

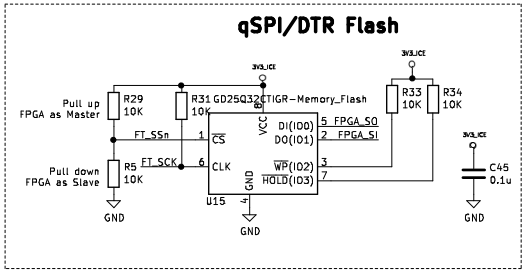

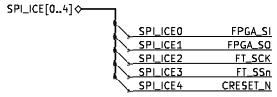

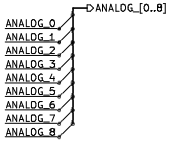

Sheet: /SensorShields/
File: SensorShield.sch

Title:

Size: A3	Date:	Rev:
KiCad E.D.A. kicad 5.1.5-52549c586ubuntu16.04.1		Id: 8/9

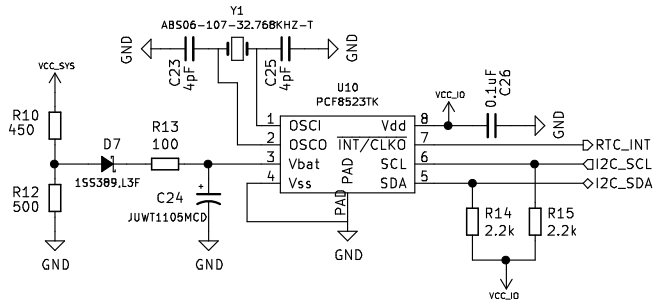

Sheet: /I2C/
File: I2C.sch

Title:

Size: A4	Date:	Rev:
KiCad E.D.A. kicad 5.1.5-52549c5~86ubuntu16.04.1		Id: 9/9