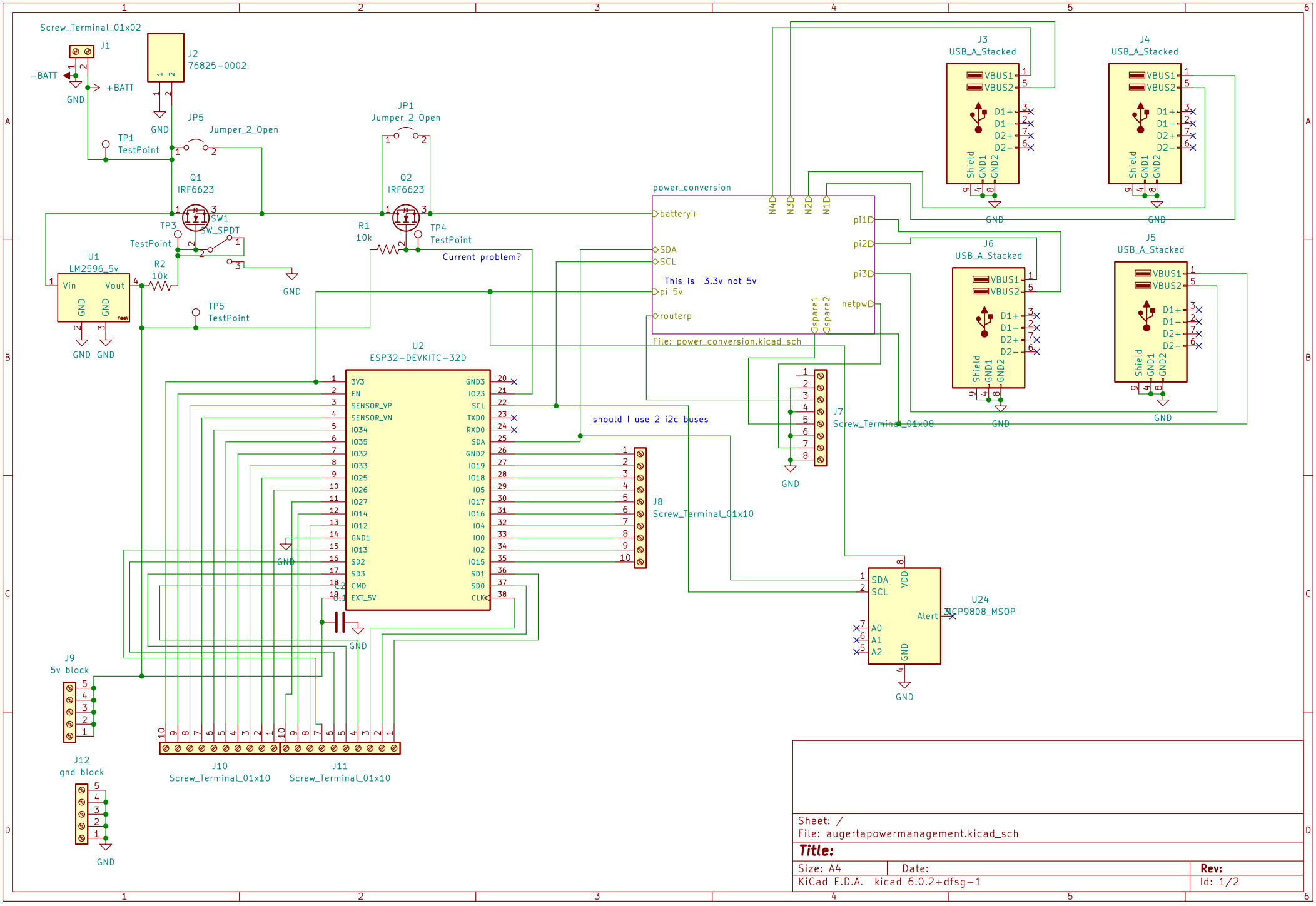

Sheet: /
File: augertapowermanagement.kicad_sch

Title:

Size: A4	Date:	Rev:
KiCad E.D.A. kicad 6.0.2+dfsg−1		Id: 1/2

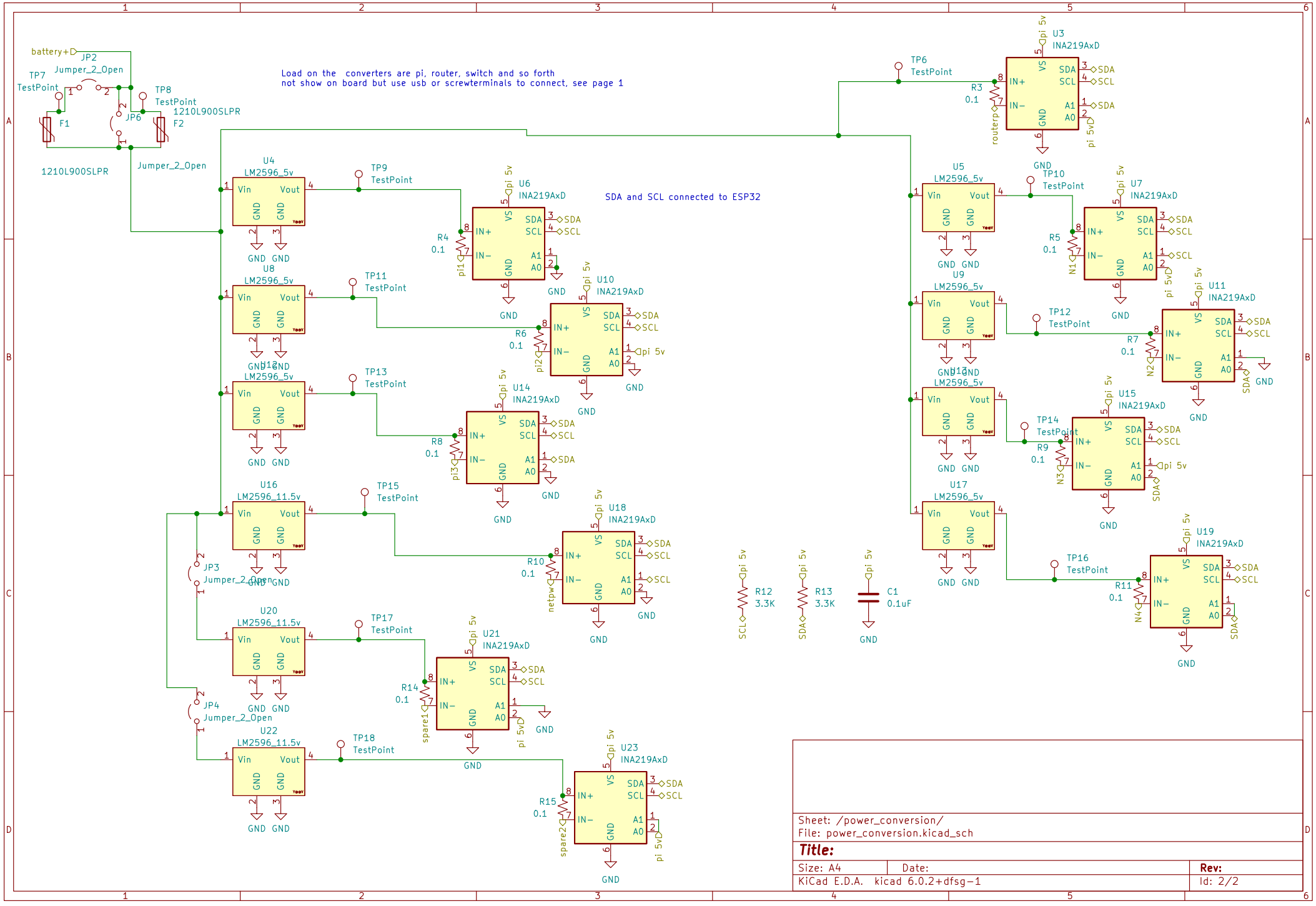
battery+
JP2
Jumper_2_Open
TP7
TestPoint
TP8
TestPoint
1210L900SLPR
F1
F2
JP6
Jumper_2_Open
1210L900SLPR
Load on the converters are pi, router, switch and so forth
not show on board but use usb or screwterminals to connect, see page 1
SDA and SCL connected to ESP32
U4
LM2596_5v
U8
LM2596_5v
U12
LM2596_5v
U16
LM2596_11.5v
U20
LM2596_11.5v
U22
LM2596_11.5v
JP3
Jumper_2_Open
JP4
Jumper_2_Open
U6
INA219AxD
U10
INA219AxD
U14
INA219AxD
U18
INA219AxD
U21
INA219AxD
U23
INA219AxD
TP9
TP11
TP13
TP15
TP17
TP18
R4
R6
R8
R10
R14
R15
0.1
pi1
pi2
pi3
netpw
spare1
spare2
U3
INA219AxD
U5
LM2596_5v
U9
LM2596_5v
U13
LM2596_5v
U17
LM2596_5v
U7
INA219AxD
U11
INA219AxD
U15
INA219AxD
U19
INA219AxD
TP6
TP10
TP12
TP14
TP16
R3
R5
R7
R9
R11
routerp
N1
N2
N3
N4
R12
3.3K
R13
3.3K
C1
0.1uF
SCL
SDA
GND
pi 5v
Sheet: /power_conversion/
File: power_conversion.kicad_sch
Title:
Size: A4
Date:
Rev:
KiCad E.D.A. kicad 6.0.2+dfsg-1
Id: 2/2