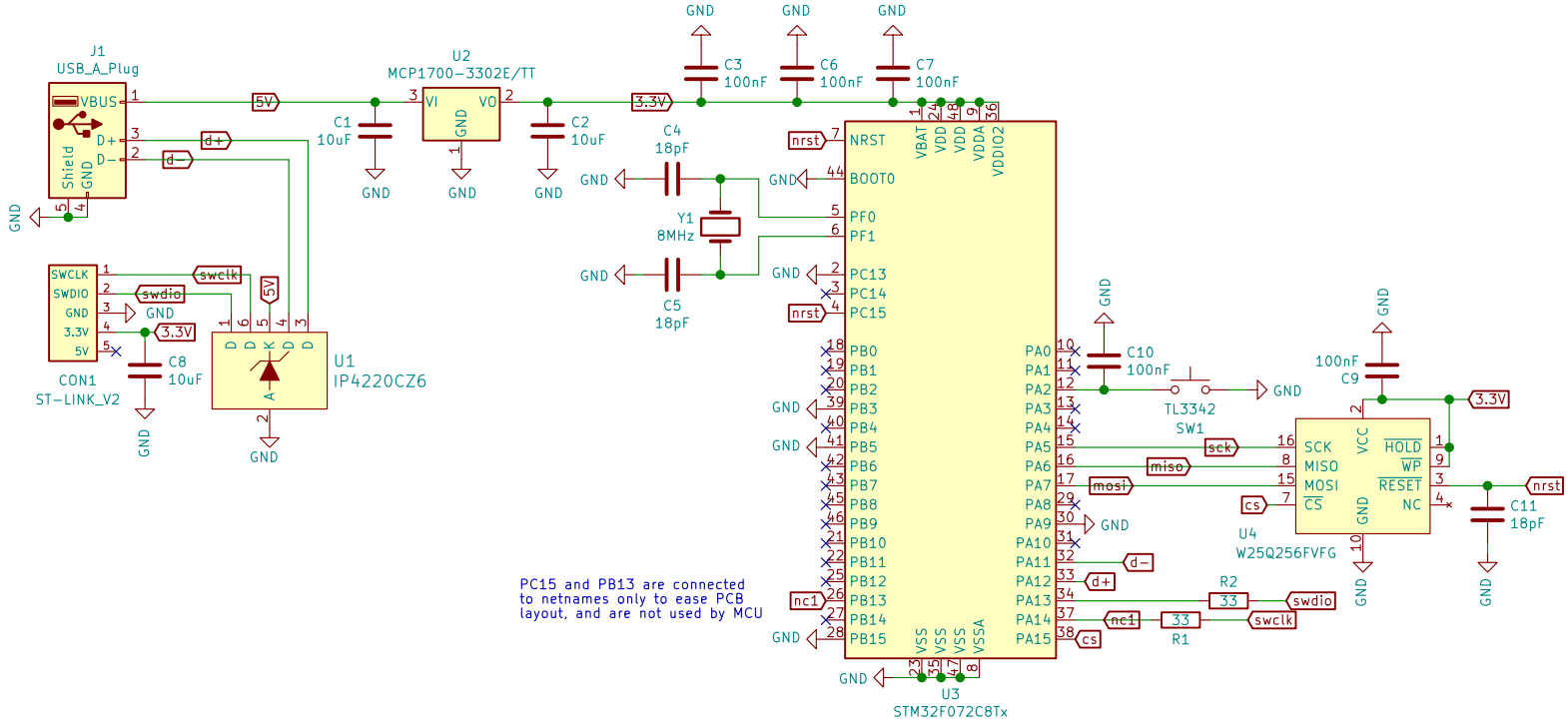

Sheet: /
File: PocketAdmin.sch

Title:

Size: A4	Date: 2019-05-30	**Rev: 1.2**
KiCad E.D.A. kicad 5.0.2+dfsg1-1		Id: 1/1