VILMA

Hardware Building Guide

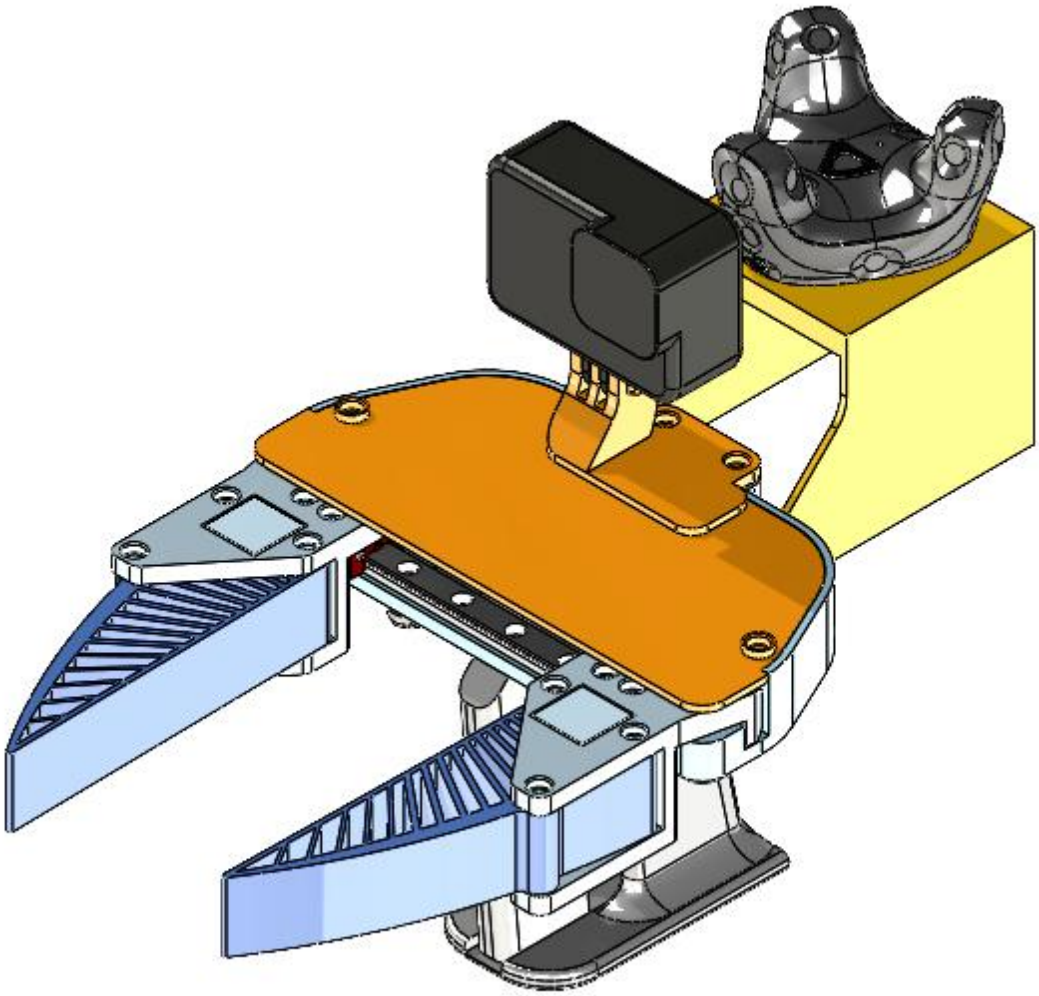

Assembly Instructions

The following steps describe the assembly process of the modified UMI handheld gripper.

1. Gather all required components

Collect all printed parts, mechanical components, and tools before starting the assembly.

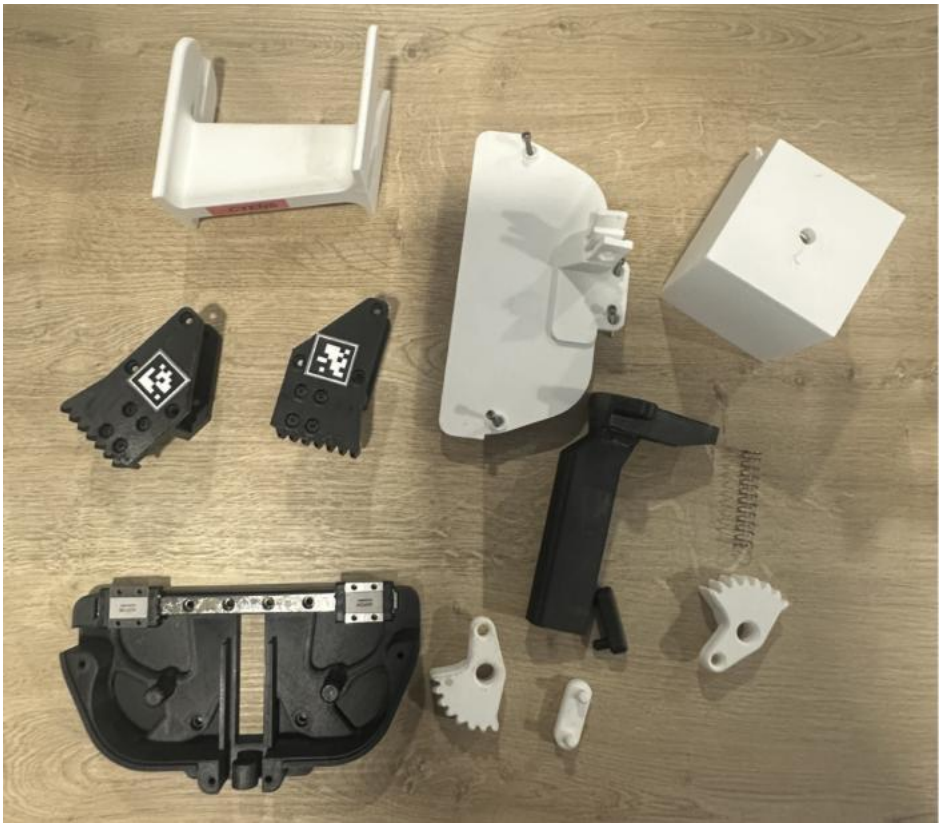

2. Install the linear rail on the base plate

Secure the linear rail onto the bottom plate using the appropriate fasteners and lubricate.

3. Install the hand grip

Lubricate and attach the grip component to the main structure.

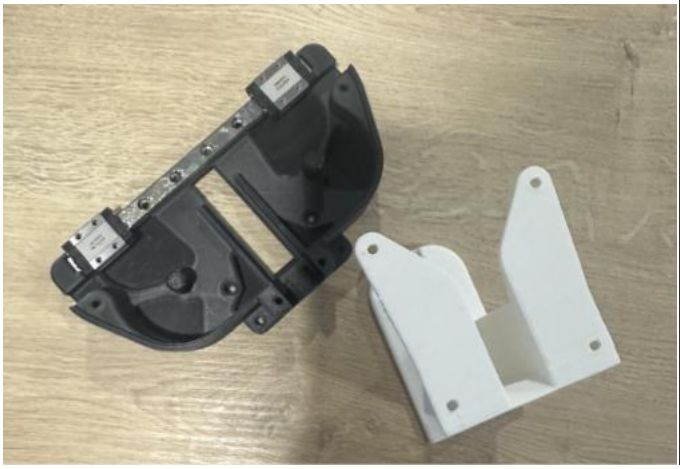

4. Install finger holders

Mount the left and right finger holders in their designated positions.

5. Install handle and spring

Attach the handle and integrate the compression spring mechanism.

6. Install gears and linkages

Assemble the motion transmission system by connecting gears and linkages.

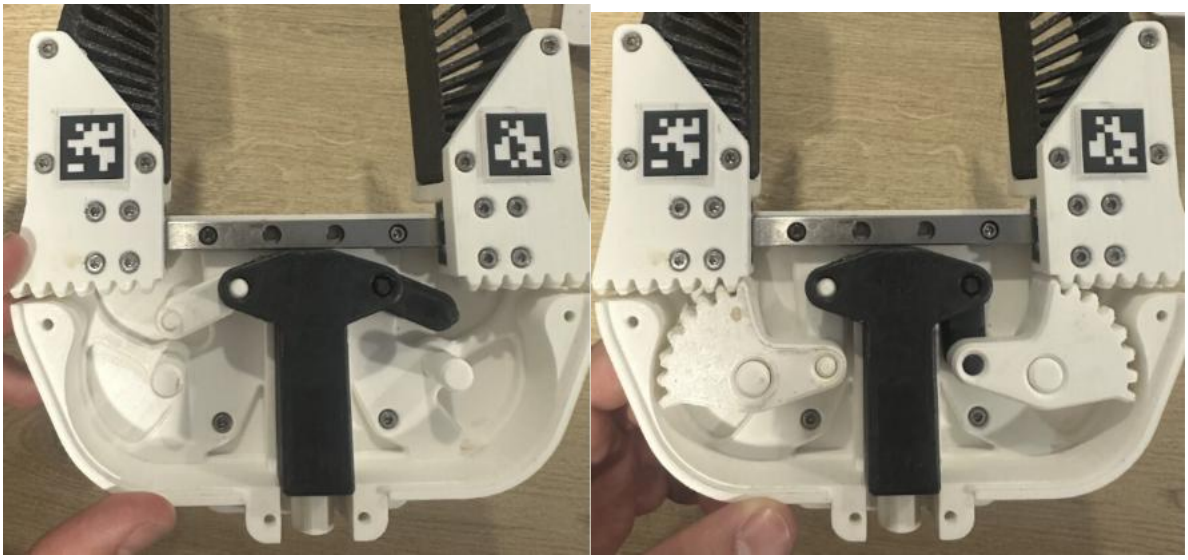

7. Apply lubrication

Apply lubricant to gears and sliding interfaces to ensure smooth operation.

8. Install top cover

Secure the top cover to complete the main structure.

9. Install balancing cube

Attach the cube component to improve balance and stability.

10. Apply grip tape

Place grip tape on the appropriate contact surfaces for improved handling.

11. Install fingers

Attach either the soft TPU fingers or the hard PLA fingers depending on the use case.

12. Perform final adjustments

Check alignment, tighten all fasteners, and verify smooth motion.

13. Apply tracking markers

Attach the printed ArUco markers to the designated locations.

14. Mount VIVE tracker

Install the VIVE tracker using the 1/4-inch mounting interface.

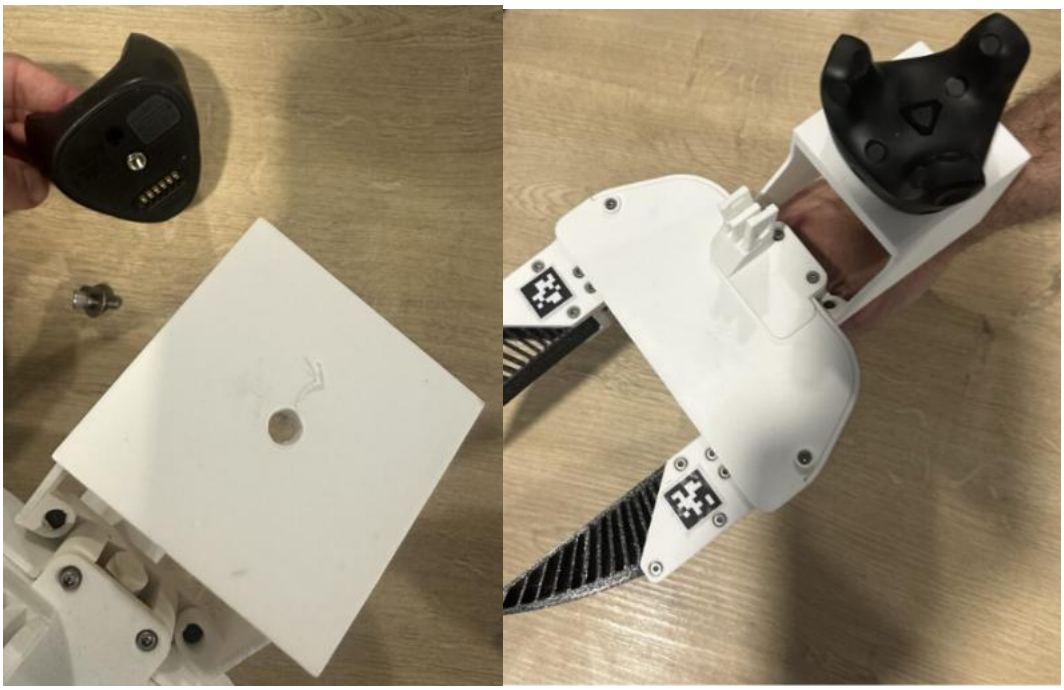

15. Mount GoPro camera

Attach the GoPro camera for egocentric recording.

Photos

Reference for the position and orientation of April tags. Please note that **left and right grippers have different tags**! The April tags on the large cube are currently unused by the algorithm therefore completely optional.