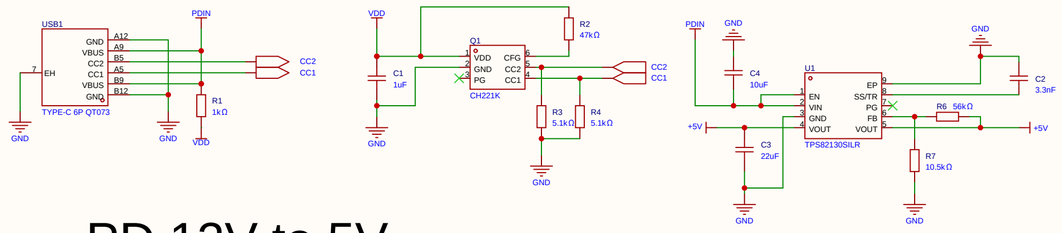

PD 12V to 5V

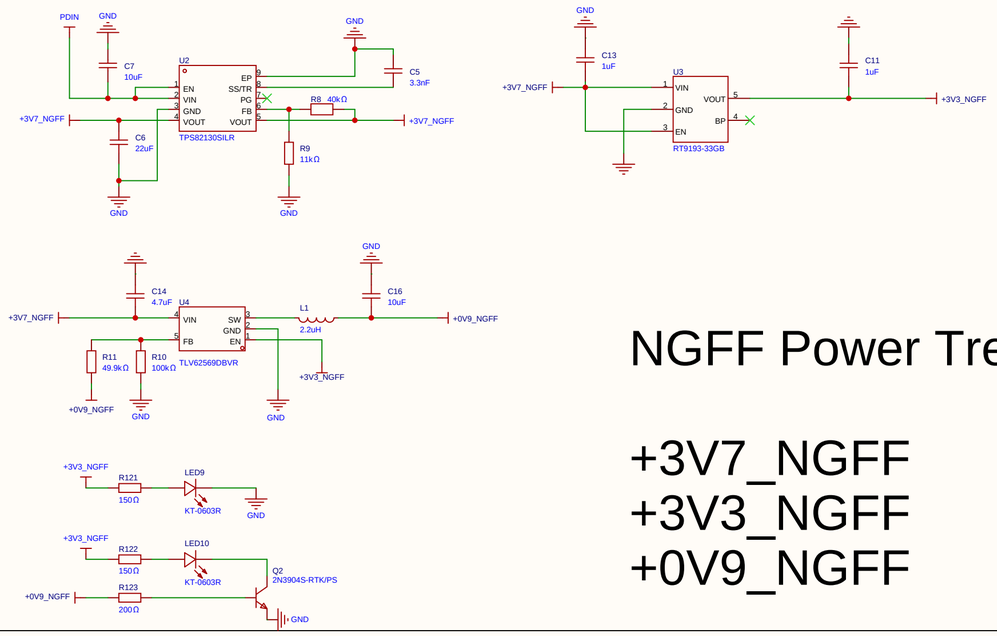

NGFF Power Tree

+3V7_NGFF
+3V3_NGFF
+0V9_NGFF

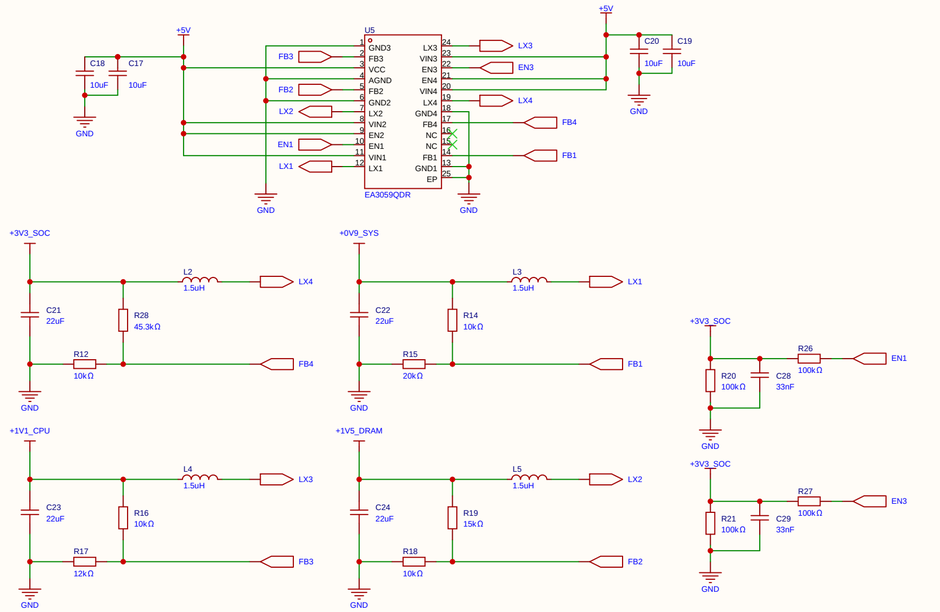

+1V1_CPU and +0V9_SYS ENABLED
after +1V5_DRAM output ~1ms

SoC Power Tree

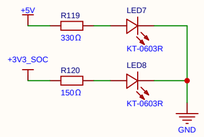

+3V3_SOC
+1V5_DRAM
+1V1_CPU
+0V9_SYS

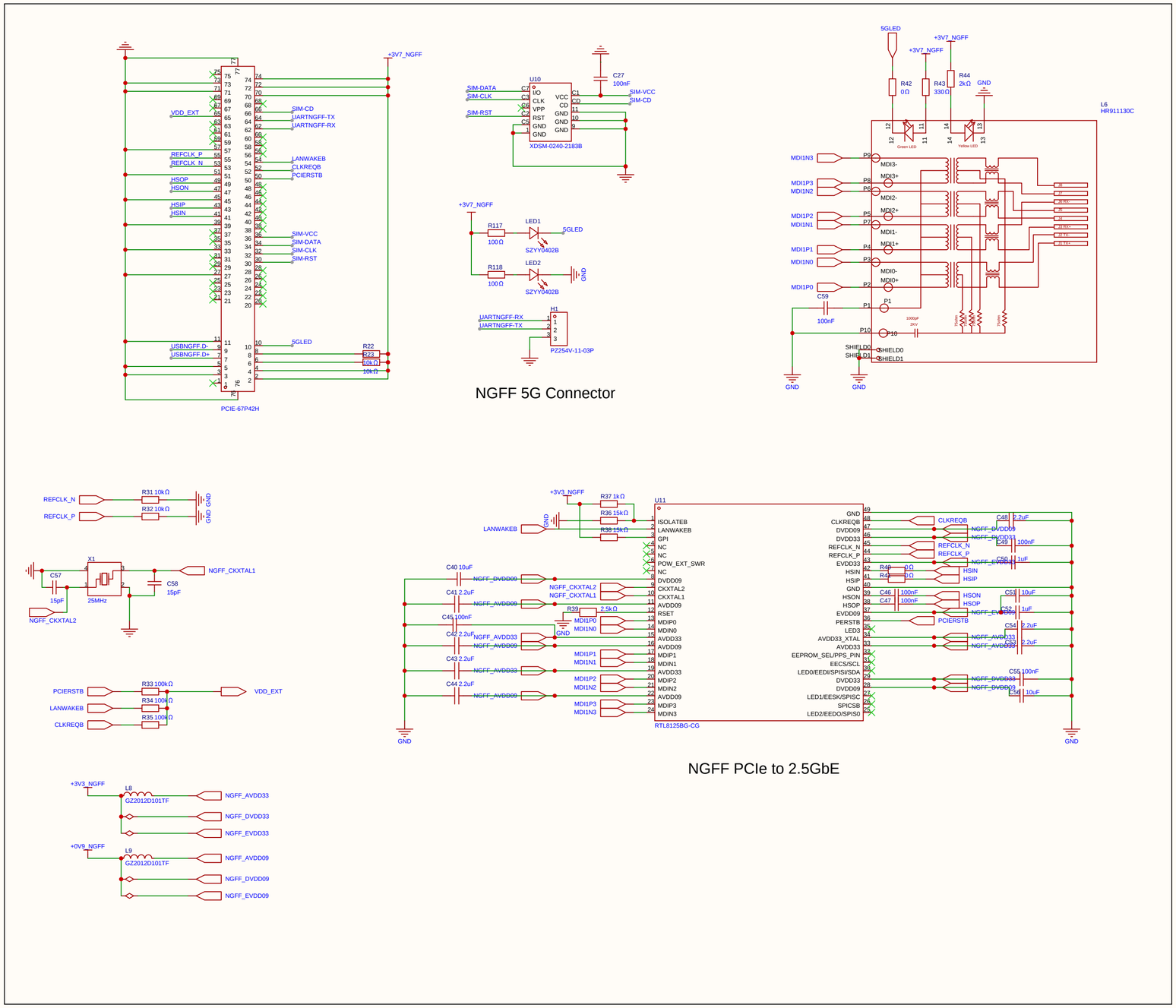

NGFF 5G Connector

NGFF PCIe to 2.5GbE

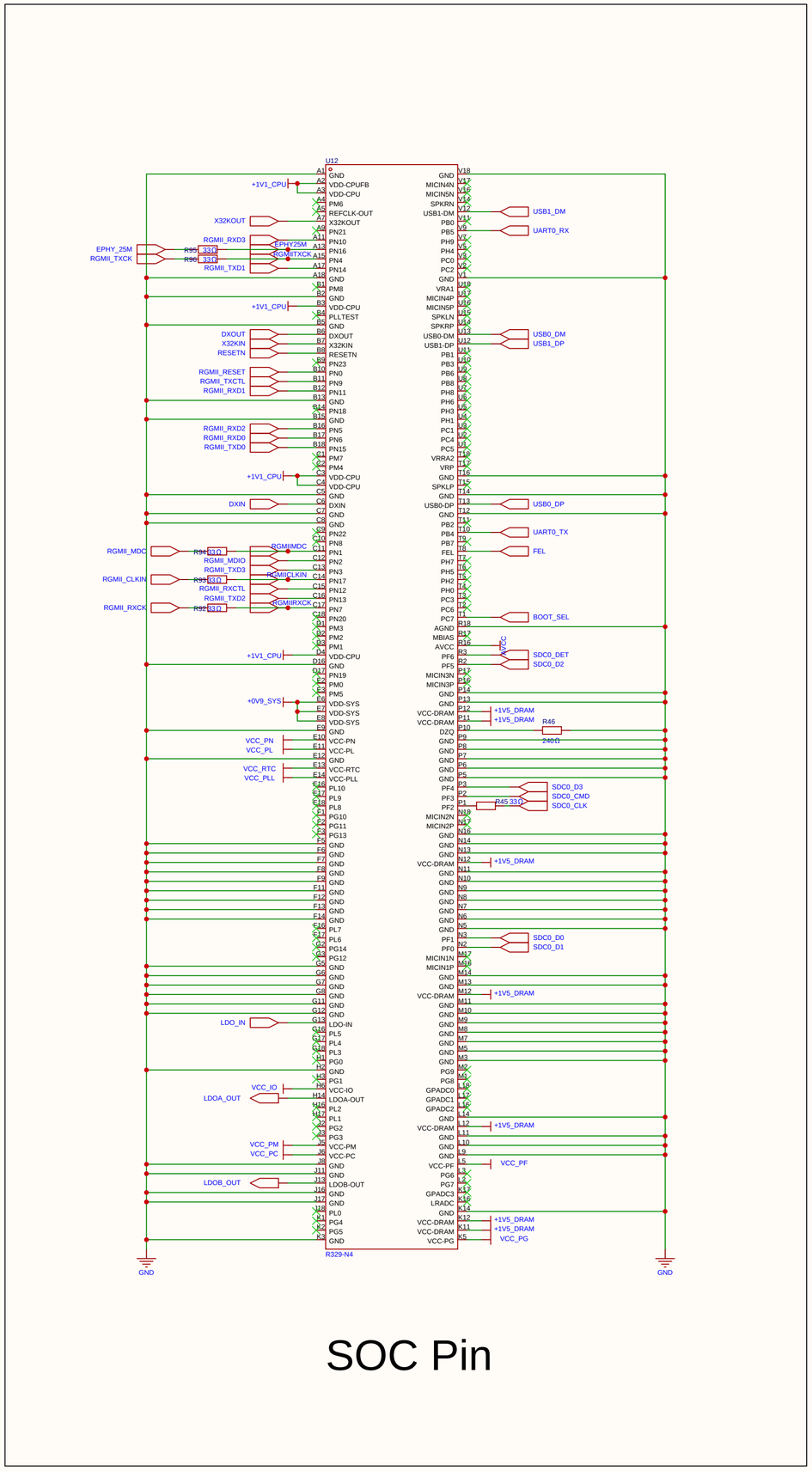
U12
R329-N4
SOC Pin

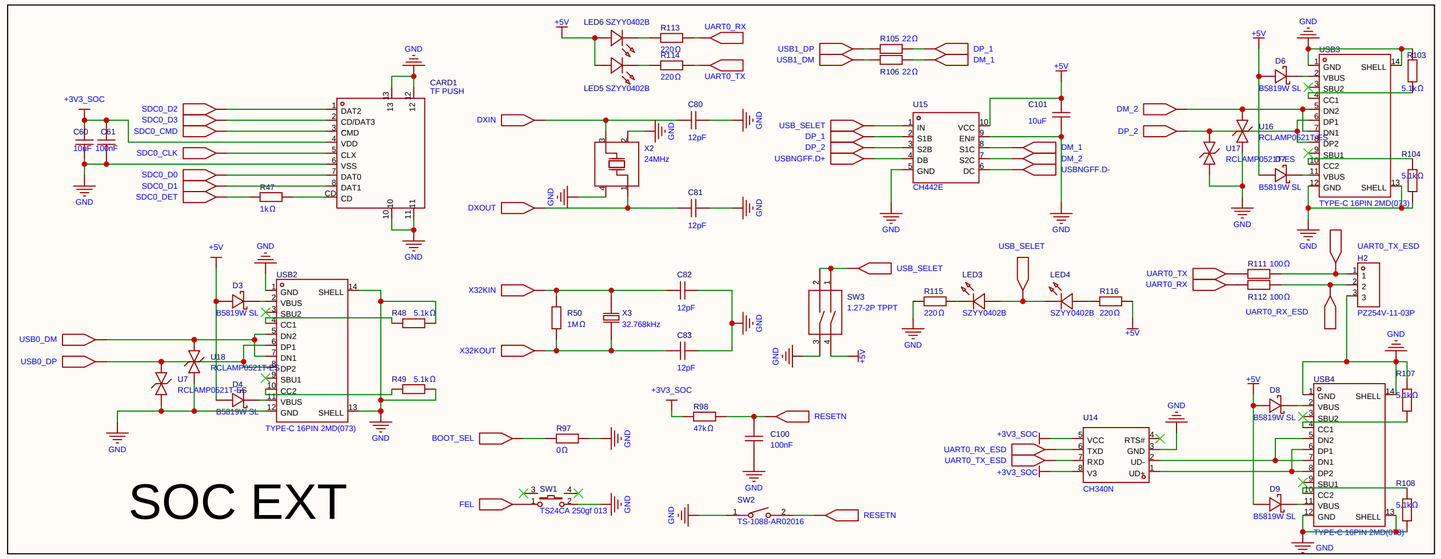
CARD1
TF PUSH
U15
CH442E
U16
U17
RCLAMP0521TPTES
B5819W SL
TYPE-C 16PIN 2MD(073)
USB3
USB4
U14
CH340N
H2
PZ254V-11-03P
X2
24MHz
X3
32.768kHz
SW3
1.27-2P TPPT
LED3
LED4
SZYY0402B
SW2
TS-1088-AR02016
TS24CA 250gf 013
SOC EXT

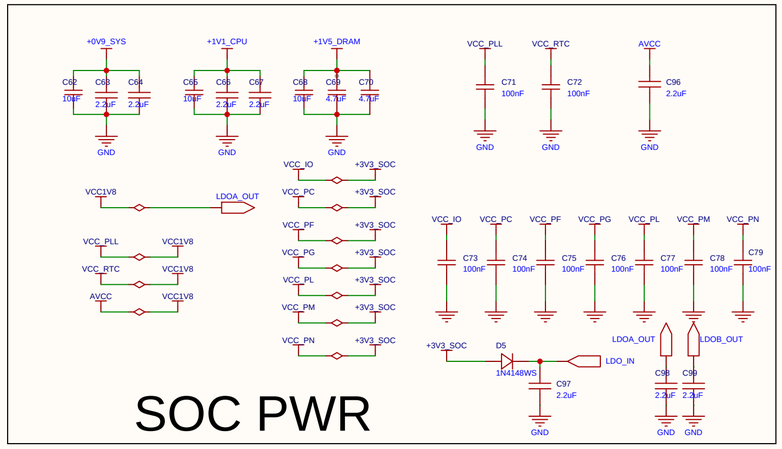
LDO_IN
1N4148WS
SOC PWR

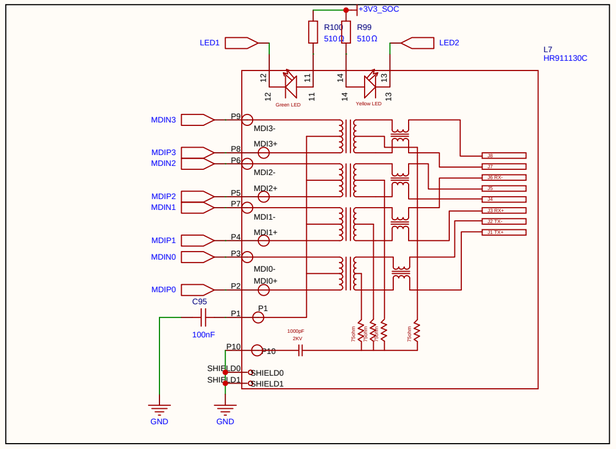
L7
HR911130C
Green LED
Yellow LED

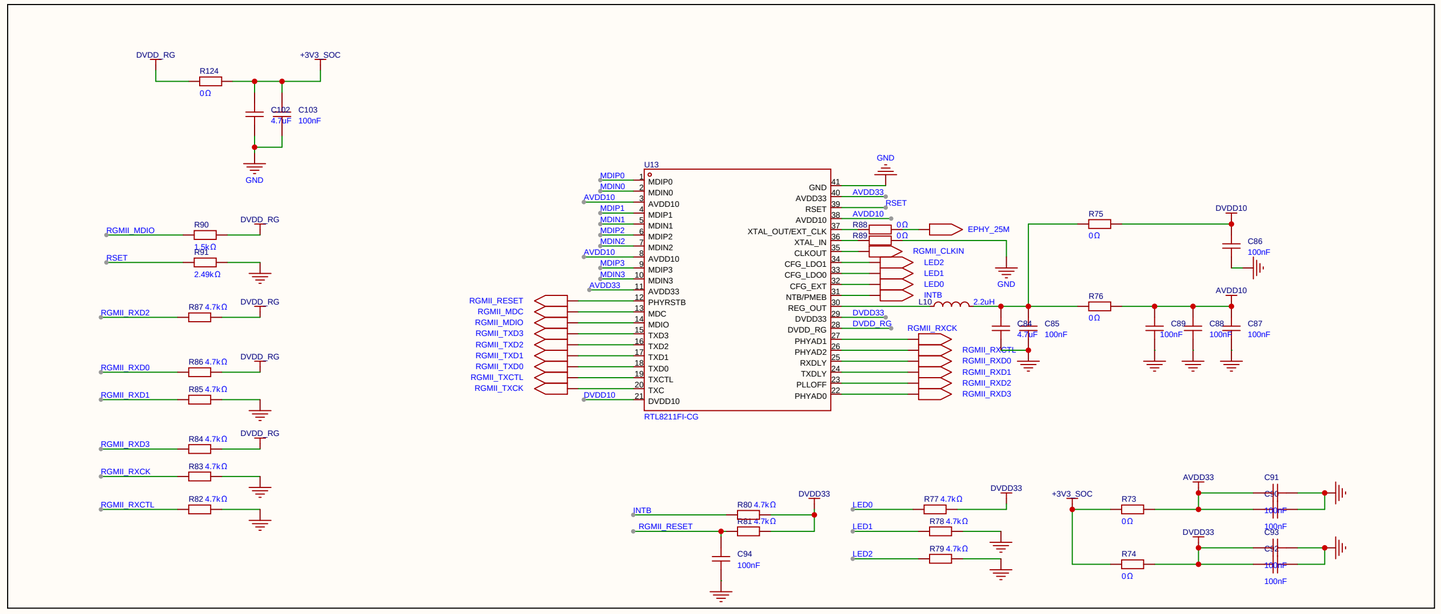
U13
RTL8211FI-CG
EPHY_25M
LED2
LED1
LED0
INTB
RSET
RGMII_RXCK
RGMII_RXCTL
RGMII_RXD0
RGMII_RXD1
RGMII_RXD2
RGMII_RXD3
RGMII_MDIO
RGMII_RESET
RGMII_MDC
RGMII_TXD3
RGMII_TXD2
RGMII_TXD1
RGMII_TXD0
RGMII_TXCTL
RGMII_TXCK