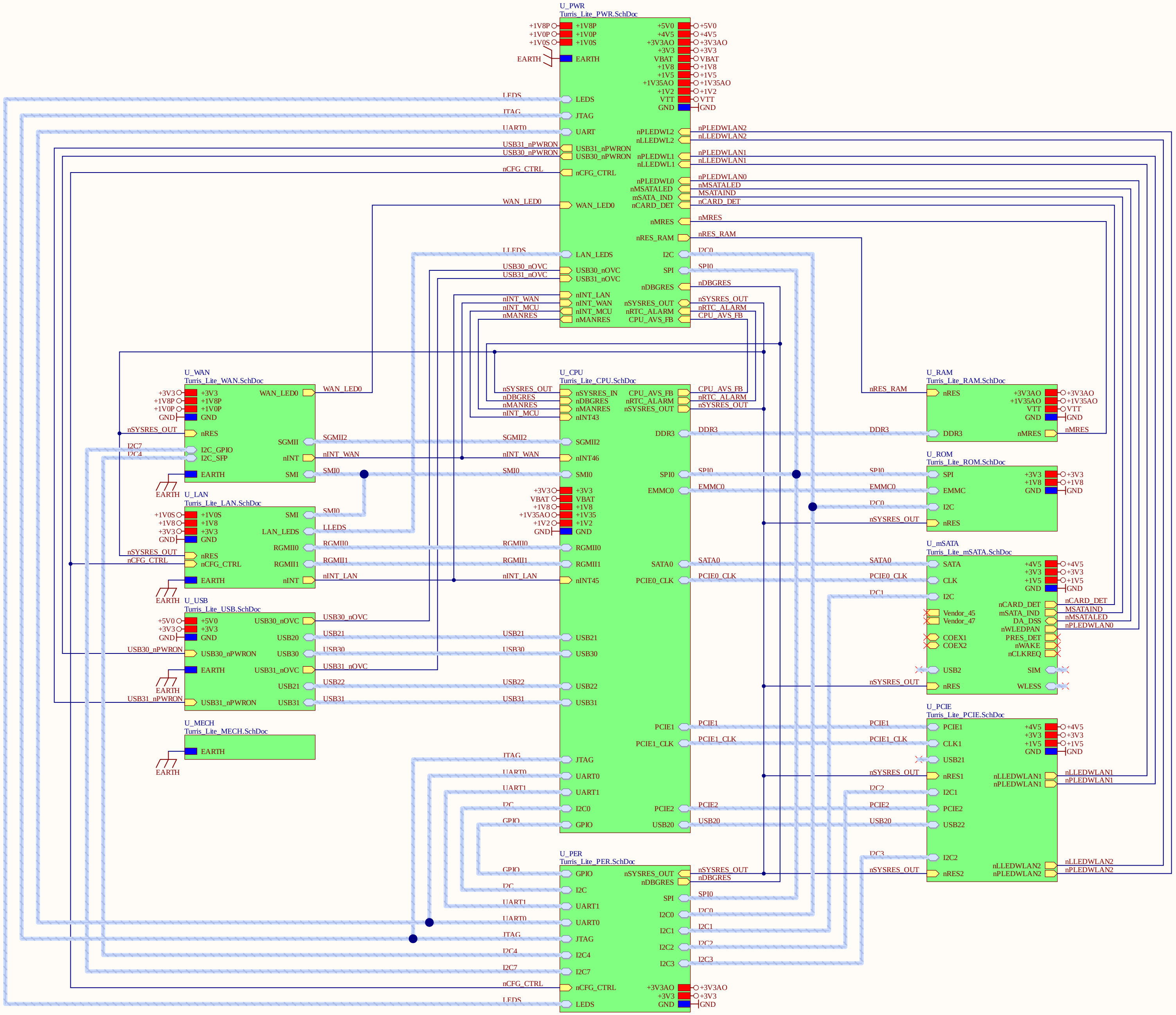
U_PWR
Turris_Lite_PWR.SchDoc
+1V8P
+1V0P
+1V0S
EARTH
LEDS
JTAG
UART
USB31_nPWRON
USB30_nPWRON
nCFG_CTRL
WAN_LED0
LAN_LEDS
USB30_nOVC
USB31_nOVC
nINT_LAN
nINT_WAN
nINT_MCU
nMANRES
+5V0
+4V5
+3V3AO
+3V3
VBAT
+1V8
+1V5
+1V35AO
+1V2
VTT
GND
nPLEDWL2
nLLEDWL2
nPLEDWL1
nLLEDWL1
nPLEDWL0
nMSATALED
mSATA_IND
nCARD_DET
nMRES
nRES_RAM
I2C
SPI
nDBGRES
nSYSRES_OUT
nRTC_ALARM
CPU_AVS_FB
nPLEDWLAN2
nLLEDWLAN2
nPLEDWLAN1
nLLEDWLAN1
nPLEDWLAN0
nMSATALED
MSATAIND
nCARD_DET
nMRES
nRES_RAM
I2C0
SPI0
nDBGRES
nSYSRES_OUT
nRTC_ALARM
CPU_AVS_FB
LEDS
JTAG
UART0
USB31_nPWRON
USB30_nPWRON
nCFG_CTRL
WAN_LED0
LLEDS
USB30_nOVC
USB31_nOVC
nINT_WAN
nINT_MCU
nMANRES
U_WAN
Turris_Lite_WAN.SchDoc
+3V3
+1V8P
+1V0P
GND
nRES
I2C_GPIO
I2C_SFP
EARTH
WAN_LED0
SGMII
nINT
SMI
nSYSRES_OUT
I2C7
I2C4
SGMII2
nINT_WAN
SMI0
U_LAN
Turris_Lite_LAN.SchDoc
+1V0S
+1V8
+3V3
GND
nRES
nCFG_CTRL
EARTH
SMI
LAN_LEDS
RGMII0
RGMII1
nINT
SMI0
LLEDS
RGMII0
RGMII1
nINT_LAN
nSYSRES_OUT
nCFG_CTRL
U_USB
Turris_Lite_USB.SchDoc
+5V0
+3V3
GND
USB30_nPWRON
EARTH
USB31_nPWRON
USB30_nOVC
USB20
USB30
USB31_nOVC
USB21
USB31
USB30_nOVC
USB21
USB30
USB31_nOVC
USB22
USB31
U_MECH
Turris_Lite_MECH.SchDoc
EARTH
U_CPU
Turris_Lite_CPU.SchDoc
nSYSRES_IN
nDBGRES
nMANRES
nINT43
SGMII2
nINT46
SMI0
+3V3
VBAT
+1V8
+1V35
+1V2
GND
RGMII0
RGMII1
nINT45
USB21
USB30
USB22
USB31
JTAG
UART0
UART1
I2C0
GPIO
CPU_AVS_FB
nRTC_ALARM
nSYSRES_OUT
DDR3
SPI0
EMMC0
SATA0
PCIE0_CLK
PCIE1
PCIE1_CLK
PCIE2
USB20
nSYSRES_OUT
nDBGRES
nMANRES
nINT_MCU
SGMII2
nINT_WAN
SMI0
+3V3
VBAT
+1V8
+1V35AO
+1V2
GND
RGMII0
RGMII1
nINT_LAN
USB21
USB30
USB22
USB31
JTAG
UART0
UART1
I2C
GPIO
CPU_AVS_FB
nRTC_ALARM
nSYSRES_OUT
DDR3
SPI0
EMMC0
SATA0
PCIE0_CLK
PCIE1
PCIE1_CLK
PCIE2
USB20
U_PER
Turris_Lite_PER.SchDoc
GPIO
I2C
UART1
UART0
JTAG
I2C4
I2C7
nCFG_CTRL
LEDS
nSYSRES_OUT
nDBGRES
SPI
I2C0
I2C1
I2C2
I2C3
+3V3AO
+3V3
GND
GPIO
I2C
UART1
UART0
JTAG
I2C4
I2C7
nCFG_CTRL
LEDS
nSYSRES_OUT
nDBGRES
SPI0
I2C0
I2C1
I2C2
I2C3
U_RAM
Turris_Lite_RAM.SchDoc
nRES
DDR3
+3V3AO
+1V35AO
VTT
GND
nMRES
nRES_RAM
DDR3
U_ROM
Turris_Lite_ROM.SchDoc
SPI
EMMC
I2C
nRES
+3V3
+1V8
GND
SPI0
EMMC0
I2C0
nSYSRES_OUT
U_mSATA
Turris_Lite_mSATA.SchDoc
SATA
CLK
I2C
Vendor_45
Vendor_47
COEX1
COEX2
USB2
nRES
+4V5
+3V3
+1V5
GND
nCARD_DET
mSATA_IND
DA_DSS
nWLEDPAN
PRES_DET
nWAKE
nCLKREQ
SIM
WLESS
SATA0
PCIE0_CLK
I2C1
nSYSRES_OUT
nCARD_DET
MSATAIND
nMSATALED
nPLEDWLAN0
U_PCIE
Turris_Lite_PCIE.SchDoc
PCIE1
CLK1
USB21
nRES1
I2C1
PCIE2
USB22
I2C2
nRES2
+4V5
+3V3
+1V5
GND
nLLEDWLAN1
nPLEDWLAN1
nLLEDWLAN2
nPLEDWLAN2
PCIE1
PCIE1_CLK
nSYSRES_OUT
I2C2
PCIE2
USB20
I2C3
nSYSRES_OUT
nLLEDWLAN1
nPLEDWLAN1
nLLEDWLAN2
nPLEDWLAN2

Author:	Zbyněk Kos & Tomáš Rykl	Title: Turris Omnia - Top			CZ.NIC, z.s.p.o. Milešovská 5 130 00 Praha 3
Engineer:	Zbyněk Kos & Tomáš Rykl				
Drawn by:	Zbyněk Kos				
Checked by:	Tomáš Rykl	Document Number: CZ11NIC230000-1		Revision: 230000	
Approved by:	*	Sheet 1 of 26	Date: * *		
http://www.nic.cz		Name: Turris_Lite.SchDoc			

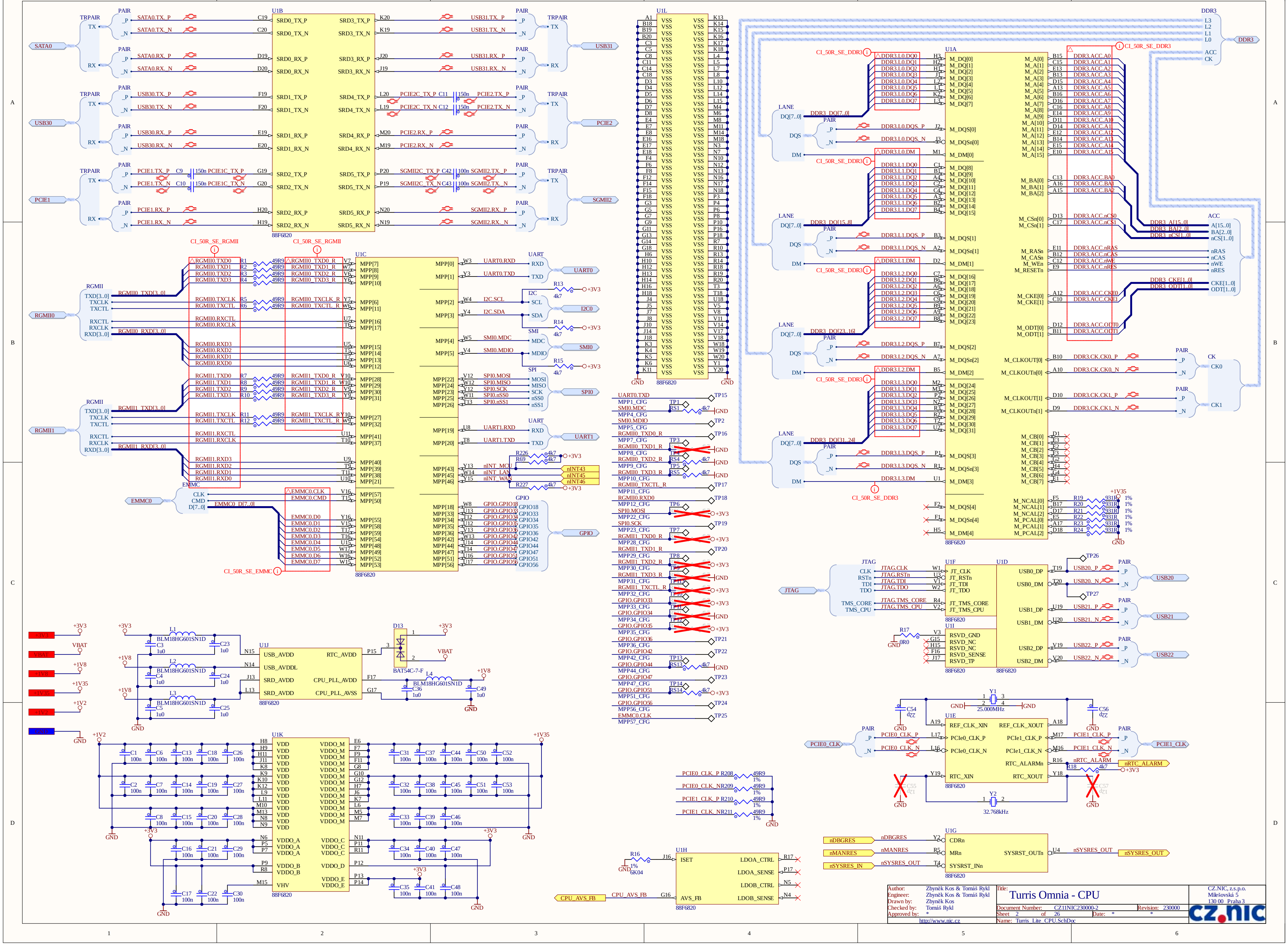
U1B
SATA0
USB30
PCIE1
USB31
PCIE2
SGMII2
SRD0_TX_P
SRD0_TX_N
SRD0_RX_P
SRD0_RX_N
SRD1_TX_P
SRD1_TX_N
SRD1_RX_P
SRD1_RX_N
SRD2_TX_P
SRD2_TX_N
SRD2_RX_P
SRD2_RX_N
SRD3_TX_P
SRD3_TX_N
SRD3_RX_P
SRD3_RX_N
SRD4_TX_P
SRD4_TX_N
SRD4_RX_P
SRD4_RX_N
SRD5_TX_P
SRD5_TX_N
SRD5_RX_P
SRD5_RX_N
88F6820
U1C
RGMII0
RGMII1
EMMC0
UART0
I2C0
SMI0
SPI0
UART1
GPIO
nINT43
nINT45
nINT46
CI_50R_SE_RGMII
CI_50R_SE_EMMC
U1L
VSS
GND
U1A
DDR3
CI_50R_SE_DDR3
DDR3_A[15..0]
DDR3_BA[2..0]
DDR3_nCS[1..0]
DDR3_CKE[1..0]
DDR3_ODT[1..0]
M_DQ[0]
M_A[0]
M_BA[0]
M_CSn[0]
M_RASn
M_CASn
M_WEn
M_RESETn
M_CKE[0]
M_ODT[0]
M_CLKOUT[0]
M_CLKOUTn[0]
M_CB[0]
M_NCAL[0]
M_PCAL[0]
U1F
U1D
JTAG
JT_CLK
JT_RSTn
JT_TDI
JT_TDO
JT_TMS_CORE
JT_TMS_CPU
USB0_DP
USB0_DM
USB1_DP
USB1_DM
USB2_DP
USB2_DM
USB20
USB21
USB22
U1I
RSVD_GND
RSVD_NC
RSVD_SENSE
RSVD_TP
U1E
REF_CLK_XIN
REF_CLK_XOUT
PCIe0_CLK_P
PCIe0_CLK_N
PCIe1_CLK_P
PCIe1_CLK_N
RTC_ALARMn
RTC_XIN
RTC_XOUT
PCIE0_CLK
PCIE1_CLK
nRTC_ALARM
Y1
25.000MHz
Y2
32.768kHz
U1G
CDRn
MRn
SYSRST_INn
SYSRST_OUTn
nDBGRES
nMANRES
nSYSRES_IN
nSYSRES_OUT
U1J
USB_AVDD
USB_AVDDL
SRD_AVDD
RTC_AVDD
CPU_PLL_AVDD
CPU_PLL_AVSS
BLM18HG601SN1D
D13
BAT54C-7-F
VBAT
+3V3
+1V8
+1V35
+1V2
U1K
VDD
VDDO_M
VDDO_A
VDDO_B
VDDO_C
VDDO_D
VDDO_E
VHV
U1H
ISET
AVS_FB
LDOA_CTRL
LDOA_SENSE
LDOB_CTRL
LDOB_SENSE
CPU_AVS_FB
1
2
3
4
5
6
A
B
C
D

Author:	Zbyněk Kos & Tomáš Rykl	Title:	Turris Omnia - CPU	CZ.NIC, z.s.p.o. Milešovská 5 130 00 Praha 3
Engineer:	Zbyněk Kos & Tomáš Rykl			
Drawn by:	Zbyněk Kos	Document Number: CZ11NIC230000-2	Revision: 230000	
Checked by:	Tomáš Rykl	Sheet 2 of 26	Date: * *	
Approved by:	*			
http://www.nic.cz		Name: Turris_Lite_CPU.SchDoc		

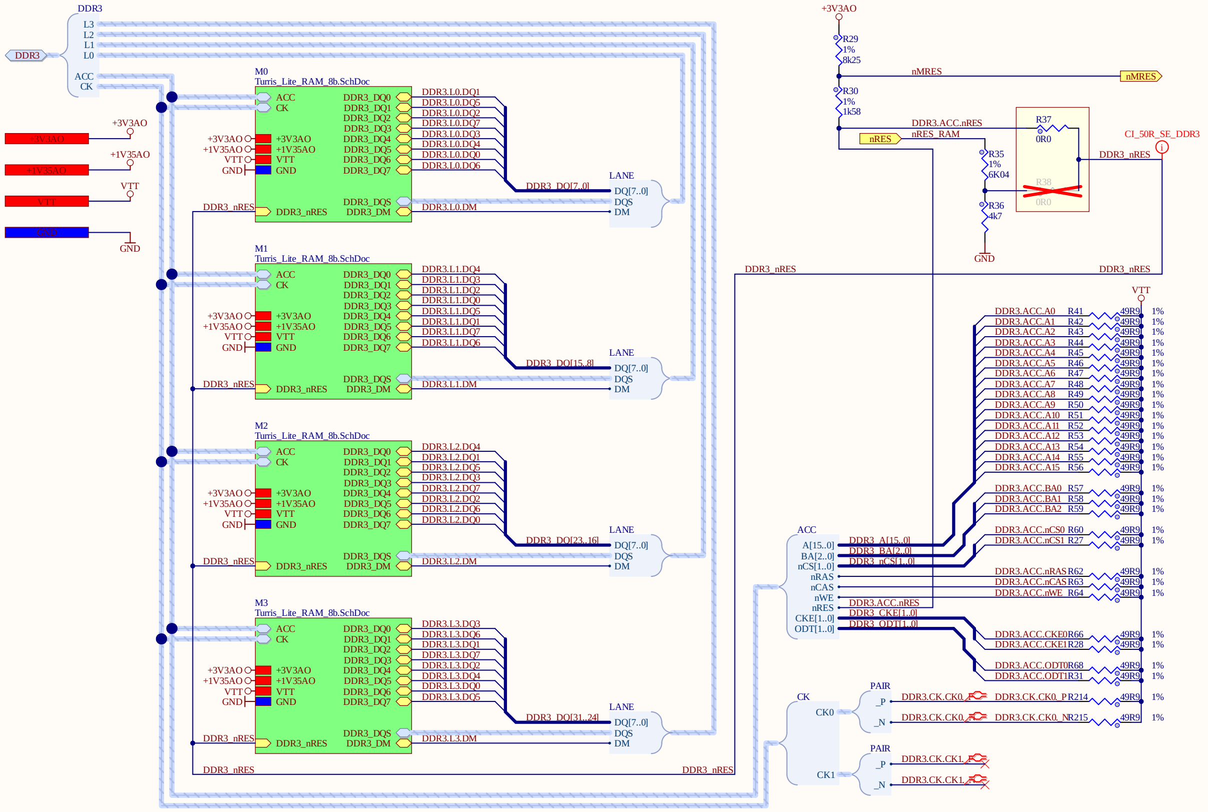
DDR3
L3
L2
L1
L0
ACC
CK
+3V3AO
+1V35AO
VTT
GND
M0
Turris_Lite_RAM_8b.SchDoc
DDR3_DQ0
DDR3_DQ1
DDR3_DQ2
DDR3_DQ3
DDR3_DQ4
DDR3_DQ5
DDR3_DQ6
DDR3_DQ7
DDR3_DQS
DDR3_DM
DDR3_nRES
DDR3.L0.DQ1
DDR3.L0.DQ5
DDR3.L0.DQ2
DDR3.L0.DQ7
DDR3.L0.DQ3
DDR3.L0.DQ4
DDR3.L0.DQ0
DDR3.L0.DQ6
DDR3_DQ[7..0]
DDR3.L0.DM
LANE
DQ[7..0]
DQS
DM
M1
Turris_Lite_RAM_8b.SchDoc
DDR3.L1.DQ4
DDR3.L1.DQ3
DDR3.L1.DQ2
DDR3.L1.DQ0
DDR3.L1.DQ5
DDR3.L1.DQ1
DDR3.L1.DQ7
DDR3.L1.DQ6
DDR3_DQ[15..8]
DDR3.L1.DM
M2
Turris_Lite_RAM_8b.SchDoc
DDR3.L2.DQ4
DDR3.L2.DQ1
DDR3.L2.DQ5
DDR3.L2.DQ3
DDR3.L2.DQ7
DDR3.L2.DQ2
DDR3.L2.DQ6
DDR3.L2.DQ0
DDR3_DQ[23..16]
DDR3.L2.DM
M3
Turris_Lite_RAM_8b.SchDoc
DDR3.L3.DQ3
DDR3.L3.DQ6
DDR3.L3.DQ1
DDR3.L3.DQ7
DDR3.L3.DQ2
DDR3.L3.DQ4
DDR3.L3.DQ0
DDR3.L3.DQ5
DDR3_DQ[31..24]
DDR3.L3.DM
DDR3_nRES
+3V3AO
R29
1%
8k25
nMRES
nMRES
R30
1%
1k58
DDR3.ACC.nRES
nRES
nRES_RAM
R35
1%
6K04
R36
4k7
GND
R37
0R0
R38
0R0
CI_50R_SE_DDR3
DDR3_nRES
VTT
ACC
A[15..0]
BA[2..0]
nCS[1..0]
nRAS
nCAS
nWE
nRES
CKE[1..0]
ODT[1..0]
DDR3_A[15..0]
DDR3_BA[2..0]
DDR3_nCS[1..0]
DDR3.ACC.nRES
DDR3_CKE[1..0]
DDR3_ODT[1..0]
DDR3.ACC.A0 R41 49R9 1%
DDR3.ACC.A1 R42 49R9 1%
DDR3.ACC.A2 R43 49R9 1%
DDR3.ACC.A3 R44 49R9 1%
DDR3.ACC.A4 R45 49R9 1%
DDR3.ACC.A5 R46 49R9 1%
DDR3.ACC.A6 R47 49R9 1%
DDR3.ACC.A7 R48 49R9 1%
DDR3.ACC.A8 R49 49R9 1%
DDR3.ACC.A9 R50 49R9 1%
DDR3.ACC.A10 R51 49R9 1%
DDR3.ACC.A11 R52 49R9 1%
DDR3.ACC.A12 R53 49R9 1%
DDR3.ACC.A13 R54 49R9 1%
DDR3.ACC.A14 R55 49R9 1%
DDR3.ACC.A15 R56 49R9 1%
DDR3.ACC.BA0 R57 49R9 1%
DDR3.ACC.BA1 R58 49R9 1%
DDR3.ACC.BA2 R59 49R9 1%
DDR3.ACC.nCS0 R60 49R9 1%
DDR3.ACC.nCS1 R27 49R9 1%
DDR3.ACC.nRAS R62 49R9 1%
DDR3.ACC.nCAS R63 49R9 1%
DDR3.ACC.nWE R64 49R9 1%
DDR3.ACC.CKE0 R66 49R9 1%
DDR3.ACC.CKE1 R28 49R9 1%
DDR3.ACC.ODT0 R68 49R9 1%
DDR3.ACC.ODT1 R31 49R9 1%
CK
CK0
CK1
PAIR
_P
_N
DDR3.CK.CK0._P
DDR3.CK.CK0._N
DDR3.CK.CK0._P R214 49R9 1%
DDR3.CK.CK0._N R215 49R9 1%
DDR3.CK.CK1._P
DDR3.CK.CK1._N

Author: Zbyněk Kos & Tomáš Rykl	Title:		CZ.NIC, z.s.p.o. Milešovská 5 130 00 Praha 3
Engineer: Zbyněk Kos & Tomáš Rykl	Turris Omnia - RAM		
Drawn by: Zbyněk Kos			
Checked by: Tomáš Rykl	Document Number: CZ11NIC230000-3	Revision: 230000	
Approved by: *	Sheet 3 of 26	Date: * *	
http://www.nic.cz	Name: Turris_Lite_RAM.SchDoc		

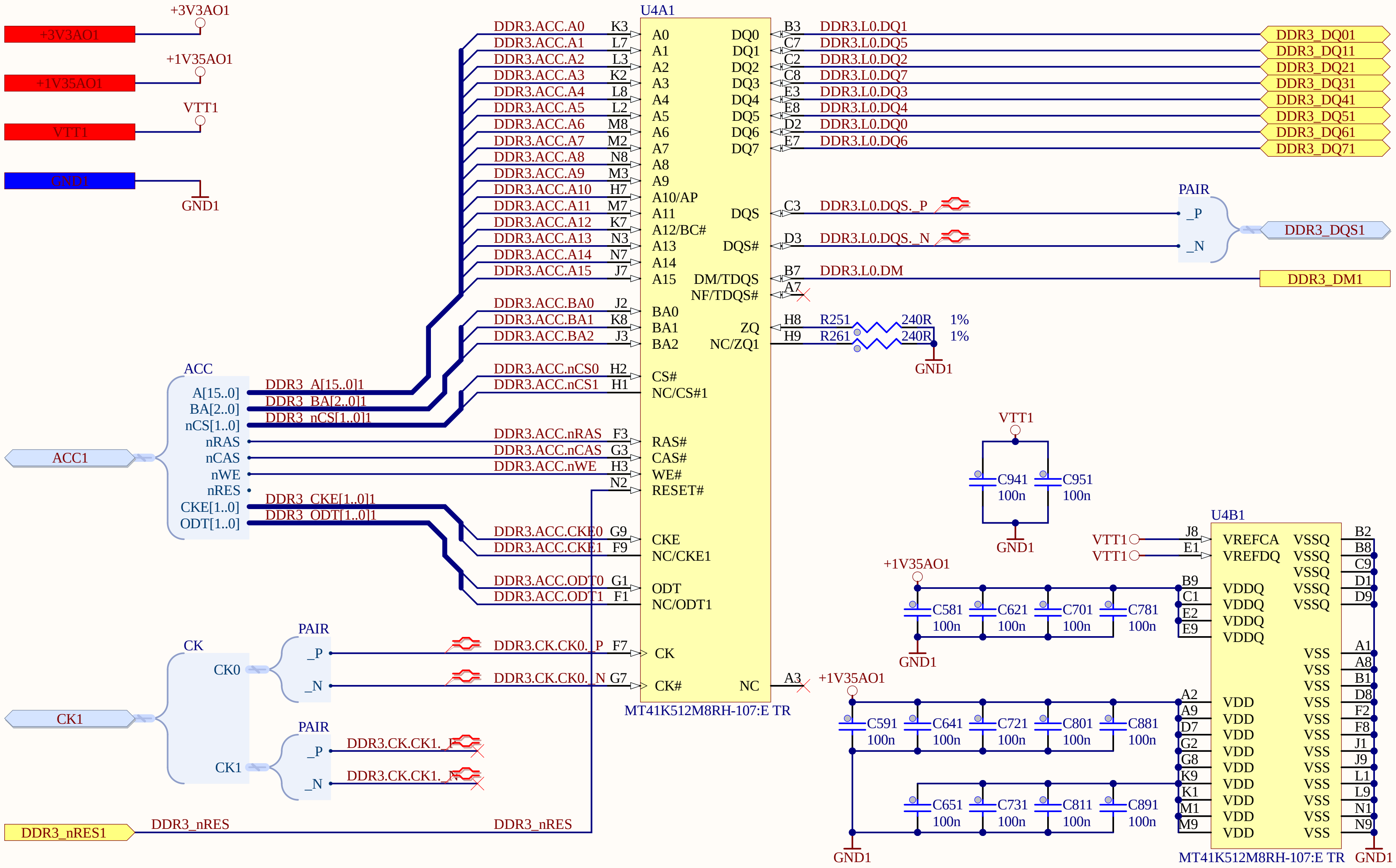
+3V3AO1
+1V35AO1
VTT1
GND1
U4A1
DDR3.ACC.A0 K3 A0
DDR3.ACC.A1 L7 A1
DDR3.ACC.A2 L3 A2
DDR3.ACC.A3 K2 A3
DDR3.ACC.A4 L8 A4
DDR3.ACC.A5 L2 A5
DDR3.ACC.A6 M8 A6
DDR3.ACC.A7 M2 A7
DDR3.ACC.A8 N8 A8
DDR3.ACC.A9 M3 A9
DDR3.ACC.A10 H7 A10/AP
DDR3.ACC.A11 M7 A11
DDR3.ACC.A12 K7 A12/BC#
DDR3.ACC.A13 N3 A13
DDR3.ACC.A14 N7 A14
DDR3.ACC.A15 J7 A15
DDR3.ACC.BA0 J2 BA0
DDR3.ACC.BA1 K8 BA1
DDR3.ACC.BA2 J3 BA2
DDR3.ACC.nCS0 H2 CS#
DDR3.ACC.nCS1 H1 NC/CS#1
DDR3.ACC.nRAS F3 RAS#
DDR3.ACC.nCAS G3 CAS#
DDR3.ACC.nWE H3 WE#
N2 RESET#
DDR3.ACC.CKE0 G9 CKE
DDR3.ACC.CKE1 F9 NC/CKE1
DDR3.ACC.ODT0 G1 ODT
DDR3.ACC.ODT1 F1 NC/ODT1
DDR3.CK.CK0._P F7 CK
DDR3.CK.CK0._N G7 CK#
NC A3
MT41K512M8RH-107:E TR
DQ0 B3 DDR3.L0.DQ1 DDR3_DQ01
DQ1 C7 DDR3.L0.DQ5 DDR3_DQ11
DQ2 C2 DDR3.L0.DQ2 DDR3_DQ21
DQ3 C8 DDR3.L0.DQ7 DDR3_DQ31
DQ4 E3 DDR3.L0.DQ3 DDR3_DQ41
DQ5 E8 DDR3.L0.DQ4 DDR3_DQ51
DQ6 D2 DDR3.L0.DQ0 DDR3_DQ61
DQ7 E7 DDR3.L0.DQ6 DDR3_DQ71
DQS C3 DDR3.L0.DQS._P
DQS# D3 DDR3.L0.DQS._N
PAIR _P _N DDR3_DQS1
DM/TDQS B7 DDR3.L0.DM DDR3_DM1
NF/TDQS# A7
ZQ H8 R251 240R 1%
NC/ZQ1 H9 R261 240R 1%
GND1
ACC
A[15..0] DDR3_A[15..0]1
BA[2..0] DDR3_BA[2..0]1
nCS[1..0] DDR3_nCS[1..0]1
nRAS
nCAS
nWE
nRES
CKE[1..0] DDR3_CKE[1..0]1
ODT[1..0] DDR3_ODT[1..0]1
ACC1
CK
CK0
PAIR _P _N
CK1
PAIR _P _N
DDR3.CK.CK1._P
DDR3.CK.CK1._N
CK1
DDR3_nRES1
DDR3_nRES
DDR3_nRES
+1V35AO1
VTT1
C941 100n
C951 100n
GND1
U4B1
VTT1 J8 VREFCA
VTT1 E1 VREFDQ
+1V35AO1
C581 100n
C621 100n
C701 100n
C781 100n
GND1
B9 C1 E2 E9 VDDQ VDDQ VDDQ VDDQ
+1V35AO1
C591 100n
C641 100n
C721 100n
C801 100n
C881 100n
C651 100n
C731 100n
C811 100n
C891 100n
GND1
A2 A9 D7 G2 G8 K9 K1 M1 M9 VDD
VSSQ B2 B8 C9 D1 D9
VSS A1 A8 B1 D8 F2 F8 J1 J9 L1 L9 N1 N9
MT41K512M8RH-107:E TR
GND1

Author: Zbyněk Kos & Tomáš Rykl Engineer: Zbyněk Kos & Tomáš Rykl Drawn by: Zbyněk Kos Checked by: Tomáš Rykl Approved by: *	Title: Turris Omnia - RAM 8b		CZ.NIC, z.s.p.o. Milešovská 5 130 00 Praha 3
	Document Number: CZ11NIC230000-4	Revision: 230000	
	Sheet 4 of 26	Date: * *	
http://www.nic.cz	Name: Turris_Lite_RAM_8b.SchDoc		

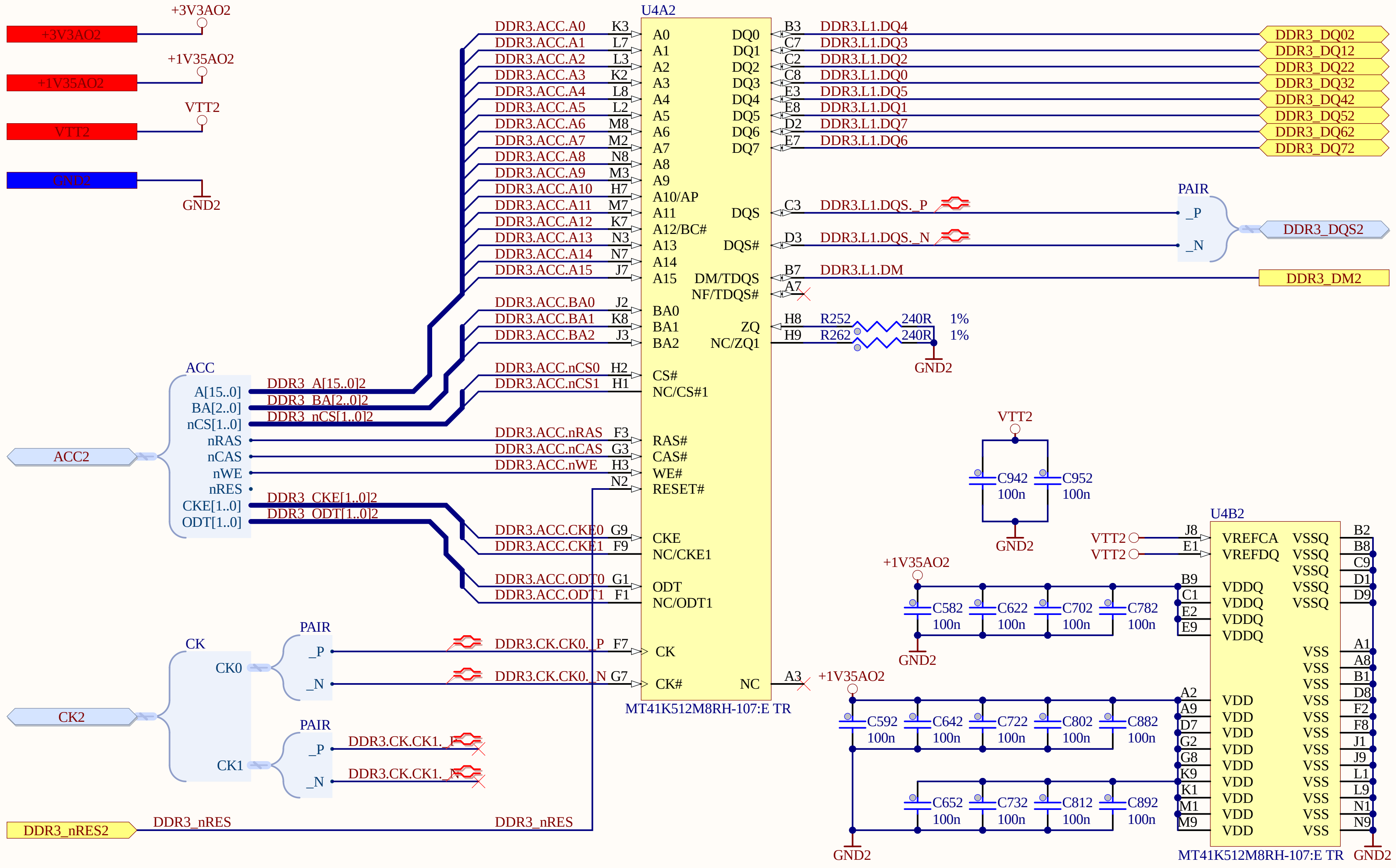
+3V3AO2
+1V35AO2
VTT2
GND2
U4A2
DDR3.ACC.A0 K3 A0
DDR3.ACC.A1 L7 A1
DDR3.ACC.A2 L3 A2
DDR3.ACC.A3 K2 A3
DDR3.ACC.A4 L8 A4
DDR3.ACC.A5 L2 A5
DDR3.ACC.A6 M8 A6
DDR3.ACC.A7 M2 A7
DDR3.ACC.A8 N8 A8
DDR3.ACC.A9 M3 A9
DDR3.ACC.A10 H7 A10/AP
DDR3.ACC.A11 M7 A11
DDR3.ACC.A12 K7 A12/BC#
DDR3.ACC.A13 N3 A13
DDR3.ACC.A14 N7 A14
DDR3.ACC.A15 J7 A15
DDR3.ACC.BA0 J2 BA0
DDR3.ACC.BA1 K8 BA1
DDR3.ACC.BA2 J3 BA2
DDR3.ACC.nCS0 H2 CS#
DDR3.ACC.nCS1 H1 NC/CS#1
DDR3.ACC.nRAS F3 RAS#
DDR3.ACC.nCAS G3 CAS#
DDR3.ACC.nWE H3 WE#
N2 RESET#
DDR3.ACC.CKE0 G9 CKE
DDR3.ACC.CKE1 F9 NC/CKE1
DDR3.ACC.ODT0 G1 ODT
DDR3.ACC.ODT1 F1 NC/ODT1
DDR3.CK.CK0._P F7 CK
DDR3.CK.CK0._N G7 CK#
NC A3
MT41K512M8RH-107:E TR
DQ0 B3 DDR3.L1.DQ4 DDR3_DQ02
DQ1 C7 DDR3.L1.DQ3 DDR3_DQ12
DQ2 C2 DDR3.L1.DQ2 DDR3_DQ22
DQ3 C8 DDR3.L1.DQ0 DDR3_DQ32
DQ4 E3 DDR3.L1.DQ5 DDR3_DQ42
DQ5 E8 DDR3.L1.DQ1 DDR3_DQ52
DQ6 D2 DDR3.L1.DQ7 DDR3_DQ62
DQ7 E7 DDR3.L1.DQ6 DDR3_DQ72
DQS C3 DDR3.L1.DQS._P
DQS# D3 DDR3.L1.DQS._N
PAIR
_P
_N
DDR3_DQS2
DM/TDQS B7 DDR3.L1.DM DDR3_DM2
NF/TDQS# A7
ZQ H8 R252 240R 1%
NC/ZQ1 H9 R262 240R 1%
GND2
ACC
A[15..0]
BA[2..0]
nCS[1..0]
nRAS
nCAS
nWE
nRES
CKE[1..0]
ODT[1..0]
ACC2
DDR3_A[15..0]2
DDR3_BA[2..0]2
DDR3_nCS[1..0]2
DDR3_CKE[1..0]2
DDR3_ODT[1..0]2
CK
CK0
CK1
CK2
PAIR
_P
_N
DDR3.CK.CK1._P
DDR3.CK.CK1._N
DDR3_nRES2
DDR3_nRES
DDR3_nRES
VTT2
C942 100n
C952 100n
GND2
+1V35AO2
C582 100n
C622 100n
C702 100n
C782 100n
GND2
+1V35AO2
C592 100n
C642 100n
C722 100n
C802 100n
C882 100n
C652 100n
C732 100n
C812 100n
C892 100n
GND2
U4B2
VTT2 J8 VREFCA
VTT2 E1 VREFDQ
B9 VDDQ
C1 VDDQ
E2 VDDQ
E9 VDDQ
A2 VDD
A9 VDD
D7 VDD
G2 VDD
G8 VDD
K9 VDD
K1 VDD
M1 VDD
M9 VDD
VSSQ B2
VSSQ B8
VSSQ C9
VSSQ D1
VSSQ D9
VSS A1
VSS A8
VSS B1
VSS D8
VSS F2
VSS F8
VSS J1
VSS J9
VSS L1
VSS L9
VSS N1
VSS N9
MT41K512M8RH-107:E TR
GND2

Author: Zbyněk Kos & Tomáš Rykl
Engineer: Zbyněk Kos & Tomáš Rykl
Drawn by: Zbyněk Kos
Checked by: Tomáš Rykl
Approved by: *
http://www.nic.cz

Title:

Turris Omnia - RAM 8b

Document Number: CZ11NIC230000-4
Revision: 230000
Sheet 4 of 26
Date: * *
Name: Turris_Lite_RAM_8b.SchDoc

CZ.NIC, z.s.p.o.
Milešovská 5
130 00 Praha 3

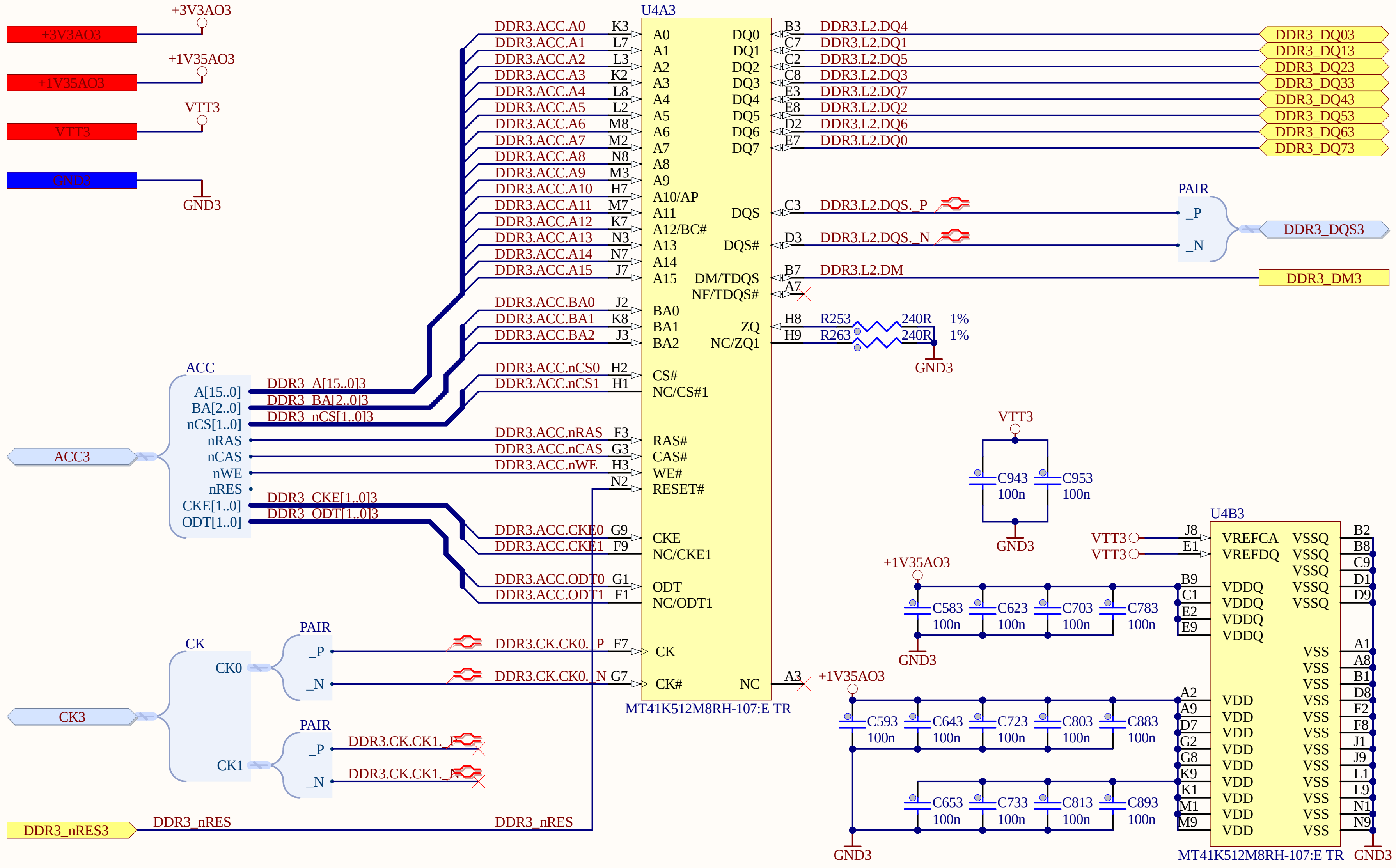
+3V3AO3
+1V35AO3
VTT3
GND3
U4A3
DDR3.ACC.A0 K3 A0
DDR3.ACC.A1 L7 A1
DDR3.ACC.A2 L3 A2
DDR3.ACC.A3 K2 A3
DDR3.ACC.A4 L8 A4
DDR3.ACC.A5 L2 A5
DDR3.ACC.A6 M8 A6
DDR3.ACC.A7 M2 A7
DDR3.ACC.A8 N8 A8
DDR3.ACC.A9 M3 A9
DDR3.ACC.A10 H7 A10/AP
DDR3.ACC.A11 M7 A11
DDR3.ACC.A12 K7 A12/BC#
DDR3.ACC.A13 N3 A13
DDR3.ACC.A14 N7 A14
DDR3.ACC.A15 J7 A15
DDR3.ACC.BA0 J2 BA0
DDR3.ACC.BA1 K8 BA1
DDR3.ACC.BA2 J3 BA2
DDR3.ACC.nCS0 H2 CS#
DDR3.ACC.nCS1 H1 NC/CS#1
DDR3.ACC.nRAS F3 RAS#
DDR3.ACC.nCAS G3 CAS#
DDR3.ACC.nWE H3 WE#
N2 RESET#
DDR3.ACC.CKE0 G9 CKE
DDR3.ACC.CKE1 F9 NC/CKE1
DDR3.ACC.ODT0 G1 ODT
DDR3.ACC.ODT1 F1 NC/ODT1
DDR3.CK.CK0._P F7 CK
DDR3.CK.CK0._N G7 CK#
NC A3
MT41K512M8RH-107:E TR
DQ0 B3 DDR3.L2.DQ4 DDR3_DQ03
DQ1 C7 DDR3.L2.DQ1 DDR3_DQ13
DQ2 C2 DDR3.L2.DQ5 DDR3_DQ23
DQ3 C8 DDR3.L2.DQ3 DDR3_DQ33
DQ4 E3 DDR3.L2.DQ7 DDR3_DQ43
DQ5 E8 DDR3.L2.DQ2 DDR3_DQ53
DQ6 D2 DDR3.L2.DQ6 DDR3_DQ63
DQ7 E7 DDR3.L2.DQ0 DDR3_DQ73
DQS C3 DDR3.L2.DQS._P
DQS# D3 DDR3.L2.DQS._N
PAIR _P _N DDR3_DQS3
DM/TDQS B7 DDR3.L2.DM DDR3_DM3
NF/TDQS# A7
ZQ H8 R253 240R 1%
NC/ZQ1 H9 R263 240R 1%
GND3
ACC
A[15..0] DDR3_A[15..0]3
BA[2..0] DDR3_BA[2..0]3
nCS[1..0] DDR3_nCS[1..0]3
nRAS
nCAS
nWE
nRES
CKE[1..0] DDR3_CKE[1..0]3
ODT[1..0] DDR3_ODT[1..0]3
ACC3
CK
CK0
PAIR _P _N
CK1
PAIR _P DDR3.CK.CK1._P
_N DDR3.CK.CK1._N
CK3
DDR3_nRES3
DDR3_nRES
DDR3_nRES
VTT3
C943 100n
C953 100n
GND3
U4B3
VTT3 J8 VREFCA
VTT3 E1 VREFDQ
+1V35AO3
C583 100n
C623 100n
C703 100n
C783 100n
GND3
B9 C1 E2 E9 VDDQ VDDQ VDDQ VDDQ
+1V35AO3
C593 100n
C643 100n
C723 100n
C803 100n
C883 100n
C653 100n
C733 100n
C813 100n
C893 100n
GND3
A2 A9 D7 G2 G8 K9 K1 M1 M9 VDD
VSSQ B2 B8 C9 D1 D9
VSS A1 A8 B1 D8 F2 F8 J1 J9 L1 L9 N1 N9
MT41K512M8RH-107:E TR
GND3

Author: Zbyněk Kos & Tomáš Rykl
Engineer: Zbyněk Kos & Tomáš Rykl
Drawn by: Zbyněk Kos
Checked by: Tomáš Rykl
Approved by: *
http://www.nic.cz

Title:
Turris Omnia - RAM 8b

Document Number: CZ11NIC230000-4
Revision: 230000
Sheet 4 of 26
Date: * *
Name: Turris_Lite_RAM_8b.SchDoc

CZ.NIC, z.s.p.o.
Milešovská 5
130 00 Praha 3

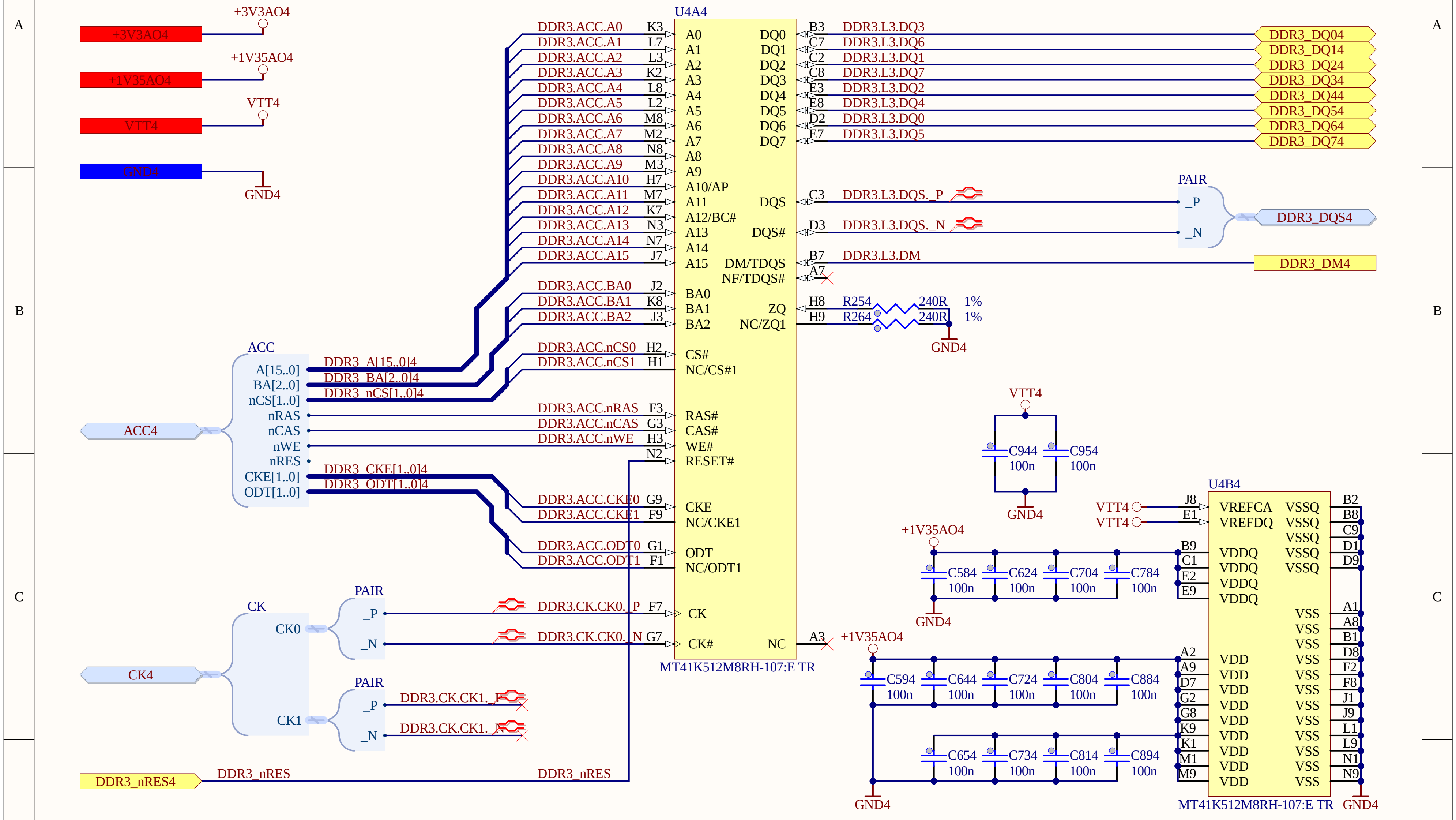
+3V3AO4
+1V35AO4
VTT4
GND4
U4A4
DDR3.ACC.A0 K3 A0
DDR3.ACC.A1 L7 A1
DDR3.ACC.A2 L3 A2
DDR3.ACC.A3 K2 A3
DDR3.ACC.A4 L8 A4
DDR3.ACC.A5 L2 A5
DDR3.ACC.A6 M8 A6
DDR3.ACC.A7 M2 A7
DDR3.ACC.A8 N8 A8
DDR3.ACC.A9 M3 A9
DDR3.ACC.A10 H7 A10/AP
DDR3.ACC.A11 M7 A11
DDR3.ACC.A12 K7 A12/BC#
DDR3.ACC.A13 N3 A13
DDR3.ACC.A14 N7 A14
DDR3.ACC.A15 J7 A15
DDR3.ACC.BA0 J2 BA0
DDR3.ACC.BA1 K8 BA1
DDR3.ACC.BA2 J3 BA2
DDR3.ACC.nCS0 H2 CS#
DDR3.ACC.nCS1 H1 NC/CS#1
DDR3.ACC.nRAS F3 RAS#
DDR3.ACC.nCAS G3 CAS#
DDR3.ACC.nWE H3 WE#
N2 RESET#
DDR3.ACC.CKE0 G9 CKE
DDR3.ACC.CKE1 F9 NC/CKE1
DDR3.ACC.ODT0 G1 ODT
DDR3.ACC.ODT1 F1 NC/ODT1
DDR3.CK.CK0._P F7 CK
DDR3.CK.CK0._N G7 CK#
NC A3 +1V35AO4
DQ0 B3 DDR3.L3.DQ3 DDR3_DQ04
DQ1 C7 DDR3.L3.DQ6 DDR3_DQ14
DQ2 C2 DDR3.L3.DQ1 DDR3_DQ24
DQ3 C8 DDR3.L3.DQ7 DDR3_DQ34
DQ4 E3 DDR3.L3.DQ2 DDR3_DQ44
DQ5 E8 DDR3.L3.DQ4 DDR3_DQ54
DQ6 D2 DDR3.L3.DQ0 DDR3_DQ64
DQ7 E7 DDR3.L3.DQ5 DDR3_DQ74
DQS C3 DDR3.L3.DQS._P
DQS# D3 DDR3.L3.DQS._N
PAIR _P _N DDR3_DQS4
DM/TDQS B7 DDR3.L3.DM DDR3_DM4
NF/TDQS# A7
ZQ H8 R254 240R 1%
NC/ZQ1 H9 R264 240R 1%
GND4
MT41K512M8RH-107:E TR
ACC
A[15..0] DDR3_A[15..0]4
BA[2..0] DDR3_BA[2..0]4
nCS[1..0] DDR3_nCS[1..0]4
nRAS
nCAS
nWE
nRES
CKE[1..0] DDR3_CKE[1..0]4
ODT[1..0] DDR3_ODT[1..0]4
ACC4
CK
CK0
PAIR _P _N
CK1
PAIR _P _N
DDR3.CK.CK1._P
DDR3.CK.CK1._N
CK4
DDR3_nRES4
DDR3_nRES
VTT4
C944 100n
C954 100n
GND4
U4B4
VTT4 J8 VREFCA
VTT4 E1 VREFDQ
+1V35AO4
B9 C1 E2 E9 VDDQ
C584 100n
C624 100n
C704 100n
C784 100n
GND4
+1V35AO4
C594 100n
C644 100n
C724 100n
C804 100n
C884 100n
C654 100n
C734 100n
C814 100n
C894 100n
A2 A9 D7 G2 G8 K9 K1 M1 M9 VDD
VSSQ B2 B8 C9 D1 D9
VSS A1 A8 B1 D8 F2 F8 J1 J9 L1 L9 N1 N9
GND4
MT41K512M8RH-107:E TR
GND4

Author:	Zbyněk Kos & Tomáš Rykl	Title:			CZ.NIC, z.s.p.o. Milešovská 5 130 00 Praha 3
Engineer:	Zbyněk Kos & Tomáš Rykl	Turris Omnia - RAM 8b			
Drawn by:	Zbyněk Kos				
Checked by:	Tomáš Rykl	Document Number: CZ11NIC230000-4		Revision: 230000	
Approved by:	*	Sheet 4 of 26		Date: * *	
http://www.nic.cz		Name: Turris_Lite_RAM_8b.SchDoc			

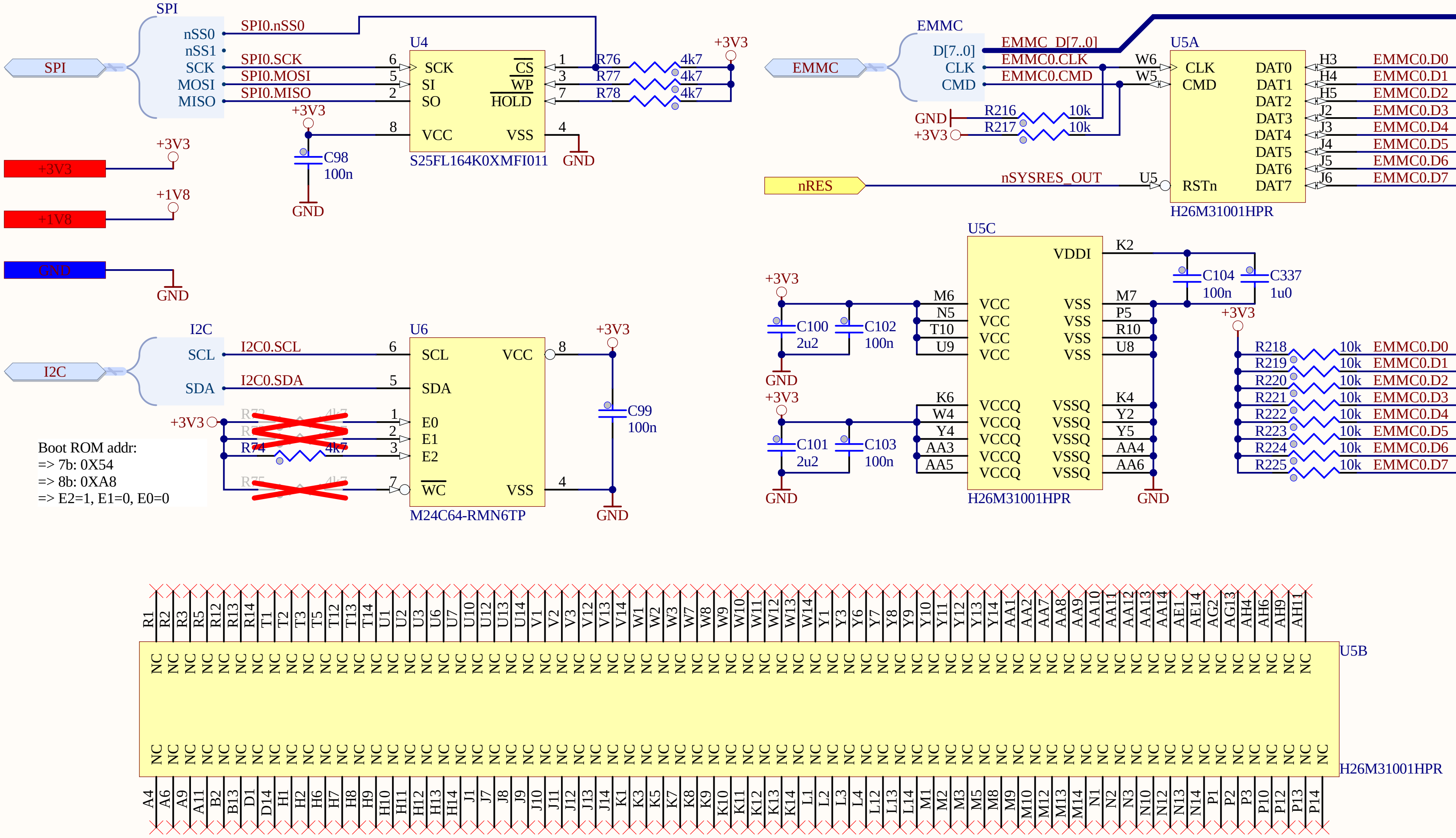
SPI
nSS0
nSS1
SCK
MOSI
MISO
SPI0.nSS0
SPI0.SCK
SPI0.MOSI
SPI0.MISO
U4
SCK
SI
SO
VCC
CS
WP
HOLD
VSS
S25FL164K0XMFI011
R76 4k7
R77 4k7
R78 4k7
+3V3
C98 100n
GND
+1V8
I2C
SCL
SDA
I2C0.SCL
I2C0.SDA
U6
E0
E1
E2
WC
M24C64-RMN6TP
R74 4k7
C99 100n
Boot ROM addr:
=> 7b: 0X54
=> 8b: 0XA8
=> E2=1, E1=0, E0=0
EMMC
D[7..0]
CLK
CMD
EMMC_D[7..0]
EMMC0.CLK
EMMC0.CMD
R216 10k
R217 10k
U5A
W6
W5
CLK
CMD
RSTn
DAT0 DAT1 DAT2 DAT3 DAT4 DAT5 DAT6 DAT7
H3 H4 H5 J2 J3 J4 J5 J6
EMMC0.D0 EMMC0.D1 EMMC0.D2 EMMC0.D3 EMMC0.D4 EMMC0.D5 EMMC0.D6 EMMC0.D7
nRES
nSYSRES_OUT
U5
H26M31001HPR
U5C
VDDI
K2
C104 100n
C337 1u0
M6 N5 T10 U9
VCC
M7 P5 R10 U8
VSS
C100 2u2
C102 100n
K6 W4 Y4 AA3 AA5
VCCQ
K4 Y2 Y5 AA4 AA6
VSSQ
C101 2u2
C103 100n
R218 R219 R220 R221 R222 R223 R224 R225 10k
U5B
NC
R1 R2 R3 R5 R12 R13 R14 T1 T2 T3 T5 T12 T13 T14 U1 U2 U3 U6 U7 U10 U12 U13 U14 V1 V2 V3 V12 V13 V14 W1 W2 W3 W7 W8 W9 W10 W11 W12 W13 W14 Y1 Y3 Y6 Y7 Y8 Y9 Y10 Y11 Y12 Y13 Y14 AA1 AA2 AA7 AA8 AA9 AA10 AA11 AA12 AA13 AA14 AE1 AE14 AG2 AG13 AH4 AH6 AH9 AH11
A4 A6 A9 A11 B2 B13 D1 D14 H1 H2 H6 H7 H8 H9 H10 H11 H12 H13 H14 J1 J7 J8 J9 J10 J11 J12 J13 J14 K1 K3 K5 K7 K8 K9 K10 K11 K12 K13 K14 L1 L2 L3 L4 L12 L13 L14 M1 M2 M3 M5 M8 M9 M10 M12 M13 M14 N1 N2 N3 N10 N12 N13 N14 P1 P2 P3 P10 P12 P13 P14

Author: Zbyněk Kos & Tomáš Rykl
Engineer: Zbyněk Kos & Tomáš Rykl
Drawn by: Zbyněk Kos
Checked by: Tomáš Rykl
Approved by: *
http://www.nic.cz

Title: Turris Omnia - ROM
Document Number: CZ11NIC230000-5
Revision: 230000
Sheet 5 of 26
Date: * *
Name: Turris_Lite_ROM.SchDoc

CZ.NIC, z.s.p.o.
Milešovská 5
130 00 Praha 3

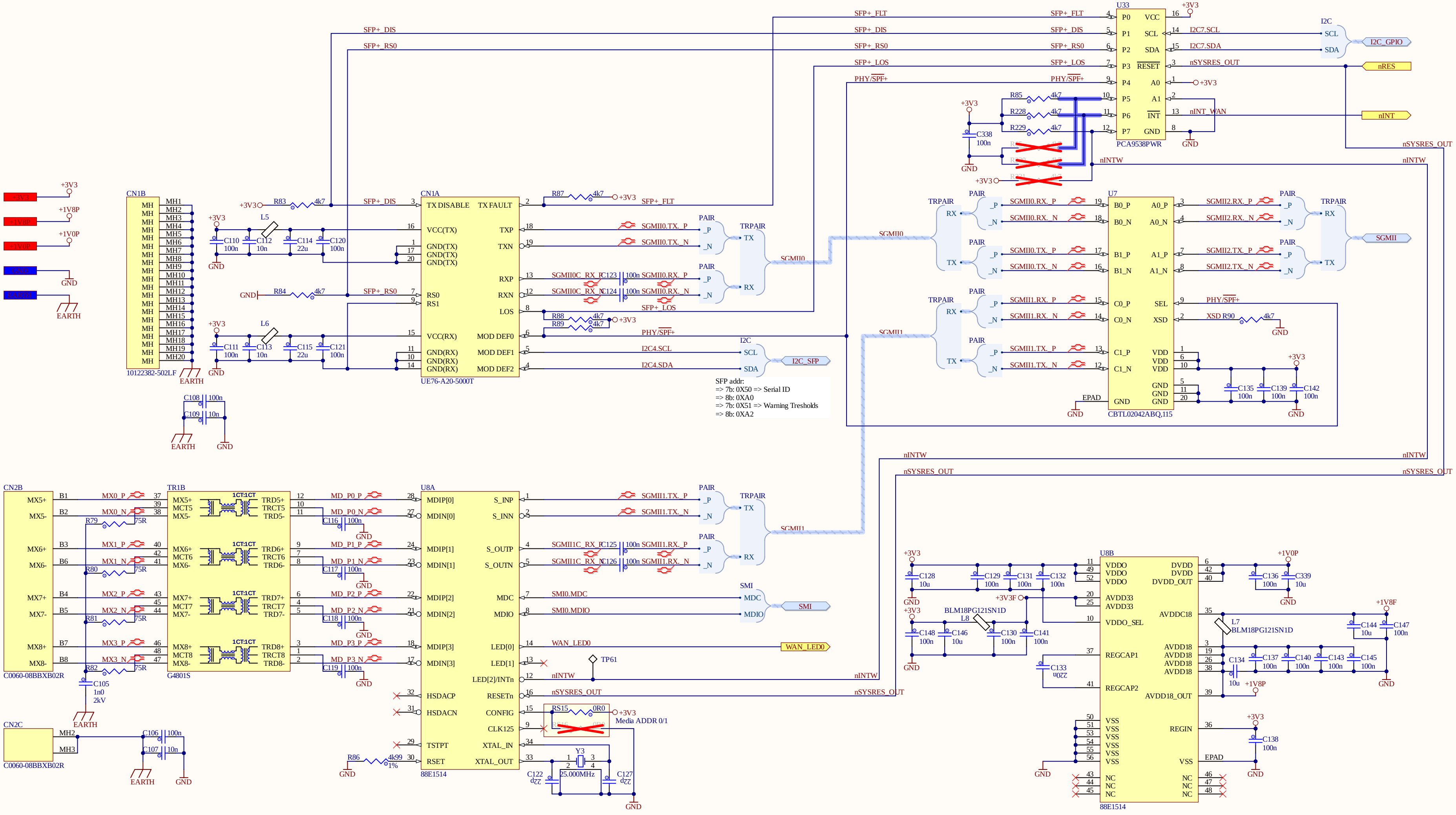
U33
PCA9538PWR
P0 P1 P2 P3 P4 P5 P6 P7
VCC SCL SDA RESET A0 A1 INT GND
+3V3
SFP+_FLT
SFP+_DIS
SFP+_RS0
SFP+_LOS
PHY/SPF+
I2C7.SCL
I2C7.SDA
nSYSRES_OUT
nINT_WAN
nINTW
I2C
SCL
SDA
I2C_GPIO
nRES
nINT
R85 4k7
R228 4k7
R229 4k7
C338 100n
GND
+3V3
+1V8P
+1V0P
EARTH
CN1B
10122382-502LF
MH MH1 MH2 MH3 MH4 MH5 MH6 MH7 MH8 MH9 MH10 MH11 MH12 MH13 MH14 MH15 MH16 MH17 MH18 MH19 MH20
CN1A
UE76-A20-5000T
TX DISABLE
TX FAULT
VCC(TX)
GND(TX)
TXP
TXN
RXP
RXN
LOS
RS0
RS1
VCC(RX)
GND(RX)
MOD DEF0
MOD DEF1
MOD DEF2
R83 4k7
R84 4k7
R87 4k7
R88 4k7
R89 4k7
L5
L6
C110 100n
C112 10n
C114 22u
C120 100n
C111 100n
C113 10n
C115 22u
C121 100n
C108 100n
C109 10n
C123 100n
C124 100n
SGMII0.TX_P
SGMII0.TX_N
SGMII0C_RX_P
SGMII0C_RX_N
SGMII0.RX_P
SGMII0.RX_N
SFP+_LOS
PHY/SPF+
I2C4.SCL
I2C4.SDA
I2C_SFP
PAIR
TRPAIR
TX
RX
_P
_N
SGMII0
SGMII1
SGMII
SFP addr:
=> 7b: 0X50 => Serial ID
=> 8b: 0XA0
=> 7b: 0X51 => Warning Tresholds
=> 8b: 0XA2
U7
CBTL02042ABQ,115
B0_P B0_N B1_P B1_N C0_P C0_N C1_P C1_N
A0_P A0_N A1_P A1_N SEL XSD VDD GND EPAD
SGMII0.RX_P
SGMII0.RX_N
SGMII0.TX_P
SGMII0.TX_N
SGMII1.RX_P
SGMII1.RX_N
SGMII1.TX_P
SGMII1.TX_N
SGMII2.RX_P
SGMII2.RX_N
SGMII2.TX_P
SGMII2.TX_N
XSD R90 4k7
C135 100n
C139 100n
C142 100n
CN2B
C0060-08BBXB02R
MX5+ MX5- MX6+ MX6- MX7+ MX7- MX8+ MX8-
B1 B2 B3 B6 B4 B5 B7 B8
MX0_P MX0_N MX1_P MX1_N MX2_P MX2_N MX3_P MX3_N
R79 75R
R80 75R
R81 75R
R82 75R
C105 1n0 2kV
TR1B
G4801S
1CT:1CT
MCT5 MCT6 MCT7 MCT8
TRD5+ TRCT5 TRD5- TRD6+ TRCT6 TRD6- TRD7+ TRCT7 TRD7- TRD8+ TRCT8 TRD8-
MD_P0_P MD_P0_N MD_P1_P MD_P1_N MD_P2_P MD_P2_N MD_P3_P MD_P3_N
C116 100n
C117 100n
C118 100n
C119 100n
CN2C
C0060-08BBXB02R
MH2 MH3
C106 100n
C107 10n
U8A
88E1514
MDIP[0] MDIN[0] MDIP[1] MDIN[1] MDIP[2] MDIN[2] MDIP[3] MDIN[3]
HSDACP HSDACN TSTPT RSET
S_INP S_INN S_OUTP S_OUTN MDC MDIO LED[0] LED[1] LED[2]/INTn RESETn CONFIG CLK125 XTAL_IN XTAL_OUT
SGMII1.TX_P
SGMII1.TX_N
SGMII1C_RX_P
SGMII1C_RX_N
SGMII1.RX_P
SGMII1.RX_N
C125 100n
C126 100n
SMI
SMI0.MDC
SMI0.MDIO
WAN_LED0
TP61
nINTW
nSYSRES_OUT
RS15 0R0
Media ADDR 0/1
R86 4k99 1%
Y3 25.000MHz
C122 22p
C127 22p
U8B
88E1514
VDDO AVDD33 VDDO_SEL REGCAP1 REGCAP2 VSS NC
DVDD DVDD_OUT AVDDC18 AVDD18 AVDD18_OUT REGIN VSS EPAD NC
+1V0P
+1V8F
+1V8P
+3V3F
C128 10u
C129 100n
C131 100n
C132 100n
C136 100n
C339 10u
C148 100n
C146 10u
C130 100n
C141 100n
C133 220n
BLM18PG121SN1D L8
L7 BLM18PG121SN1D
C144 10u
C147 100n
C134 10u
C137 100n
C140 100n
C143 100n
C145 100n
C138 100n
1 2 3 4 5 6
A B C D

Author:	Zbyněk Kos & Tomáš Rykl	Title: Turris Omnia - WAN	CZ.NIC, z.s.p.o. Milešovská 5 130 00 Praha 3
Engineer:	Zbyněk Kos & Tomáš Rykl		
Drawn by:	Zbyněk Kos		
Checked by:	Tomáš Rykl	Document Number: CZ11NIC230000-6	Revision: 230000
Approved by:	*	Sheet 6 of 26	Date: * *
http://www.nic.cz		Name: Turris_Lite_WAN.SchDoc	

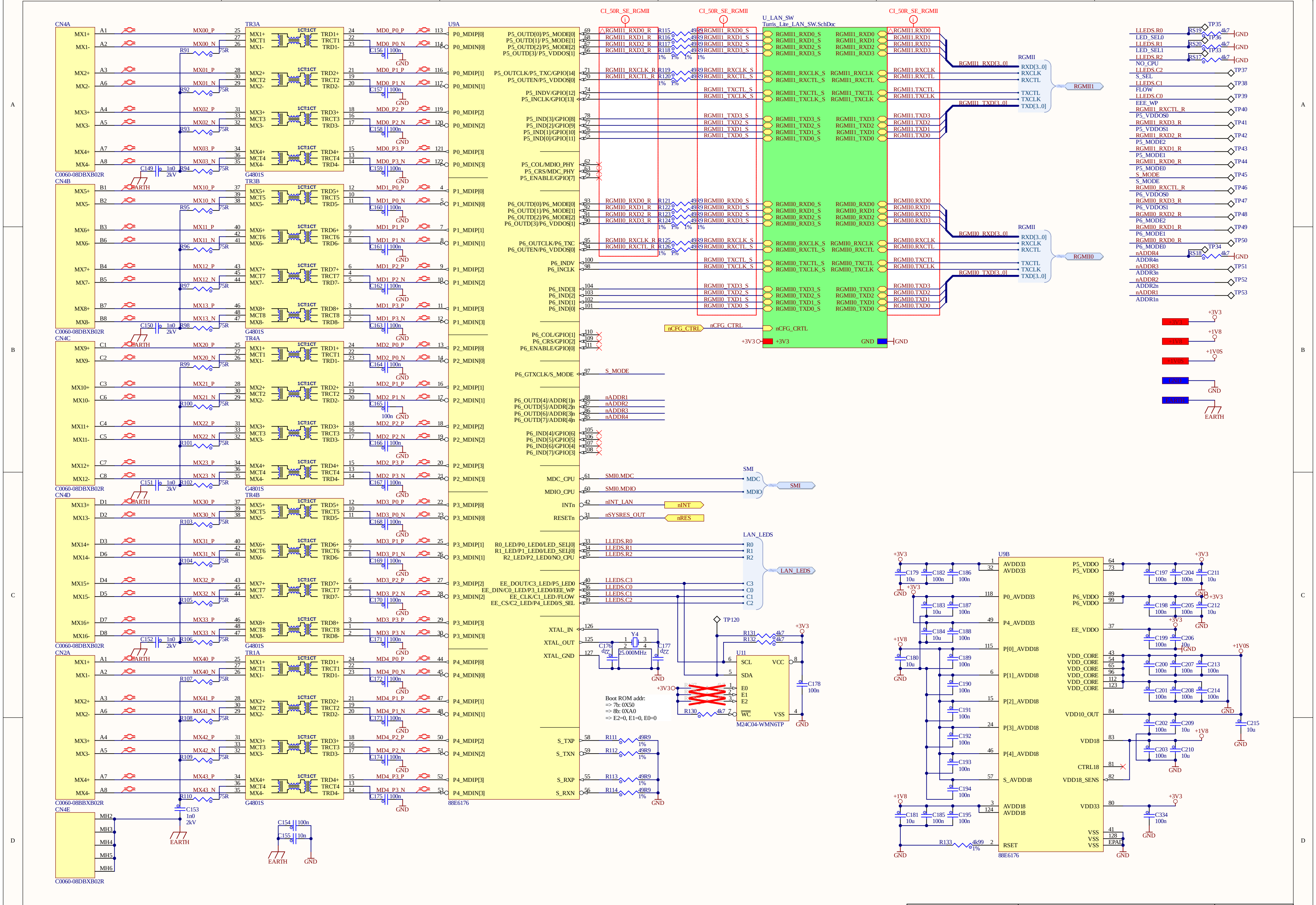
CN4A
CN4B
CN4C
CN4D
CN2A
CN4E
C0060-08DBXB02R
C0060-08BBXB02R
TR3A
TR3B
TR4A
TR4B
TR1A
G4801S
1CT:1CT
U9A
88E6176
U9B
U_LAN_SW
Turris_Lite_LAN_SW.SchDoc
CI_50R_SE_RGMII
RGMII
RGMII1
RGMII0
RGMII1_RXD[3..0]
RGMII1_TXD[3..0]
RGMII0_RXD[3..0]
RGMII0_TXD[3..0]
nCFG_CTRL
+3V3
+1V8
+1V0S
GND
EARTH
SMI
MDC
MDIO
SMI0.MDC
SMI0.MDIO
nINT_LAN
nINT
nSYSRES_OUT
nRES
LAN_LEDS
S_MODE
nADDR1
nADDR2
nADDR3
nADDR4
U11
M24C04-WMN6TP
SCL
SDA
VCC
VSS
WC
E0
E1
E2
TP120
Y4
25.000MHz
Boot ROM addr:
=> 7b: 0X50
=> 8b: 0XA0
=> E2=0, E1=0, E0=0
XTAL_IN
XTAL_OUT
XTAL_GND
MDC_CPU
MDIO_CPU
INTn
RESETn
S_TXP
S_TXN
S_RXP
S_RXN
AVDD33
P0_AVDD33
P4_AVDD33
P[0]_AVDD18
P[1]_AVDD18
P[2]_AVDD18
P[3]_AVDD18
P[4]_AVDD18
S_AVDD18
AVDD18
RSET
P5_VDDO
P6_VDDO
EE_VDDO
VDD_CORE
VDD10_OUT
VDD18
CTRL18
VDD18_SENS
VDD33
EPAD
1n0
2kV
100n
10u
75R
49R9
4k7
4k99
1%

Author: Zbyněk Kos & Tomáš Rykl
Engineer: Zbyněk Kos & Tomáš Rykl
Drawn by: Zbyněk Kos
Checked by: Tomáš Rykl
Approved by: *
http://www.nic.cz

Title: Turris Omnia - LAN
Document Number: CZ11NIC230000-7
Revision: 230000
Sheet 7 of 26
Date: * *
Name: Turris_Lite_LAN.SchDoc

CZ.NIC, z.s.p.o.
Milešovská 5
130 00 Praha 3

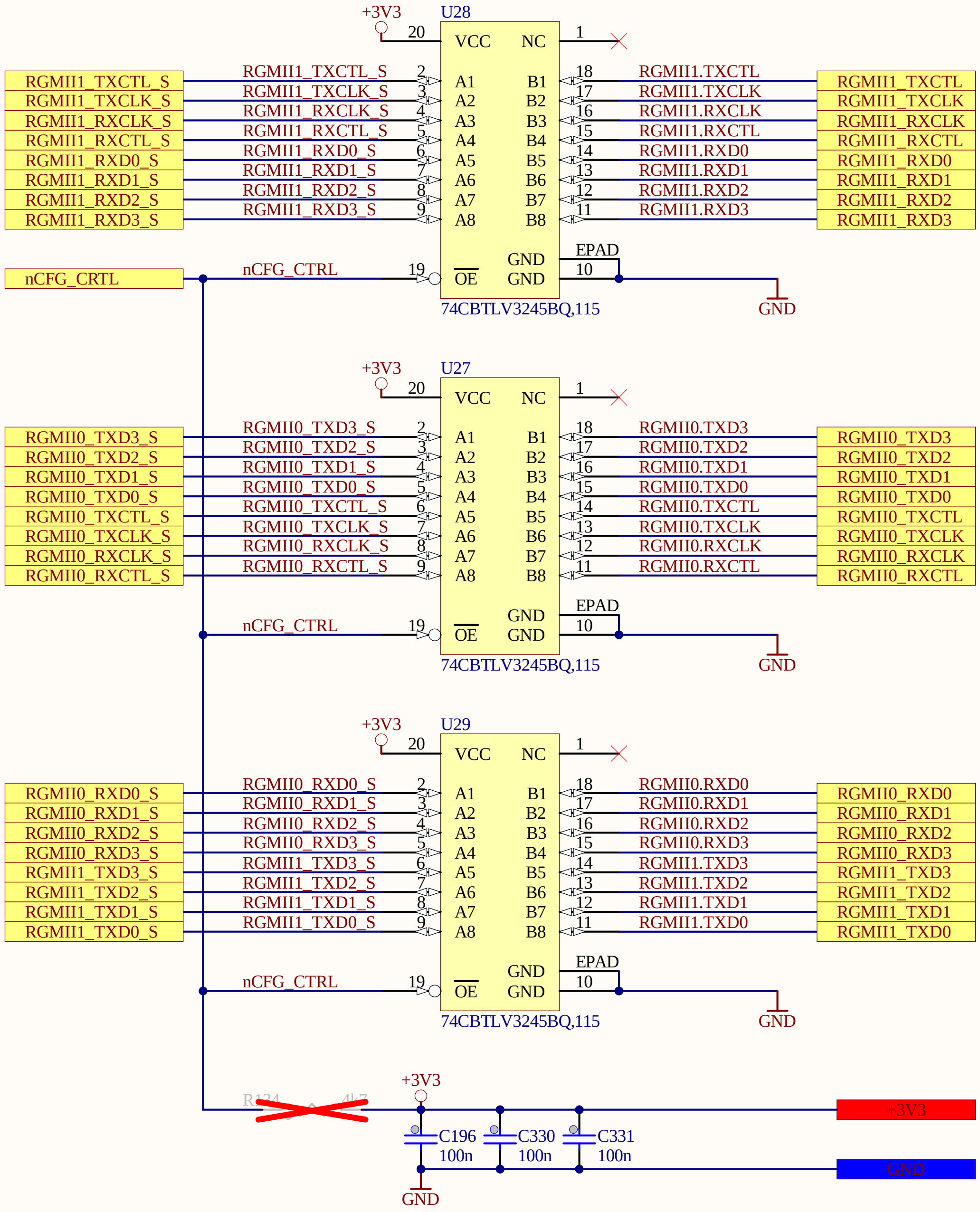
+3V3
U28
20
VCC
NC
1
RGMII1_TXCTL_S
RGMII1_TXCLK_S
RGMII1_RXCLK_S
RGMII1_RXCTL_S
RGMII1_RXD0_S
RGMII1_RXD1_S
RGMII1_RXD2_S
RGMII1_RXD3_S
2
3
4
5
6
7
8
9
A1
A2
A3
A4
A5
A6
A7
A8
B1
B2
B3
B4
B5
B6
B7
B8
18
17
16
15
14
13
12
11
RGMII1.TXCTL
RGMII1.TXCLK
RGMII1.RXCLK
RGMII1.RXCTL
RGMII1.RXD0
RGMII1.RXD1
RGMII1.RXD2
RGMII1.RXD3
RGMII1_TXCTL
RGMII1_TXCLK
RGMII1_RXCLK
RGMII1_RXCTL
RGMII1_RXD0
RGMII1_RXD1
RGMII1_RXD2
RGMII1_RXD3
nCFG_CRTL
nCFG_CTRL
19
OE
GND
GND
EPAD
10
GND
74CBTLV3245BQ,115
+3V3
U27
20
VCC
NC
1
RGMII0_TXD3_S
RGMII0_TXD2_S
RGMII0_TXD1_S
RGMII0_TXD0_S
RGMII0_TXCTL_S
RGMII0_TXCLK_S
RGMII0_RXCLK_S
RGMII0_RXCTL_S
RGMII0.TXD3
RGMII0.TXD2
RGMII0.TXD1
RGMII0.TXD0
RGMII0.TXCTL
RGMII0.TXCLK
RGMII0.RXCLK
RGMII0.RXCTL
RGMII0_TXD3
RGMII0_TXD2
RGMII0_TXD1
RGMII0_TXD0
RGMII0_TXCTL
RGMII0_TXCLK
RGMII0_RXCLK
RGMII0_RXCTL
nCFG_CTRL
19
OE
GND
GND
EPAD
10
GND
74CBTLV3245BQ,115
+3V3
U29
20
VCC
NC
1
RGMII0_RXD0_S
RGMII0_RXD1_S
RGMII0_RXD2_S
RGMII0_RXD3_S
RGMII1_TXD3_S
RGMII1_TXD2_S
RGMII1_TXD1_S
RGMII1_TXD0_S
RGMII0.RXD0
RGMII0.RXD1
RGMII0.RXD2
RGMII0.RXD3
RGMII1.TXD3
RGMII1.TXD2
RGMII1.TXD1
RGMII1.TXD0
RGMII0_RXD0
RGMII0_RXD1
RGMII0_RXD2
RGMII0_RXD3
RGMII1_TXD3
RGMII1_TXD2
RGMII1_TXD1
RGMII1_TXD0
nCFG_CTRL
19
OE
GND
GND
EPAD
10
GND
74CBTLV3245BQ,115
R124
4k7
+3V3
C196
100n
C330
100n
C331
100n
GND
+3V3
GND

Author:	Zbyněk Kos & Tomáš Rykl	Title:	Turris Omnia - LAN - Switch
Engineer:	Zbyněk Kos & Tomáš Rykl		
Drawn by:	Zbyněk Kos		
Checked by:	Tomáš Rykl	Document Number: CZ11NIC230000-8	Revision: 230000
Approved by:	*	Sheet 8 of 26	Date: * *
	http://www.nic.cz	Name: Turris_Lite_LAN_SW.SchDoc	

CZ.NIC, z.s.p.o.
Milešovská 5
130 00 Praha 3

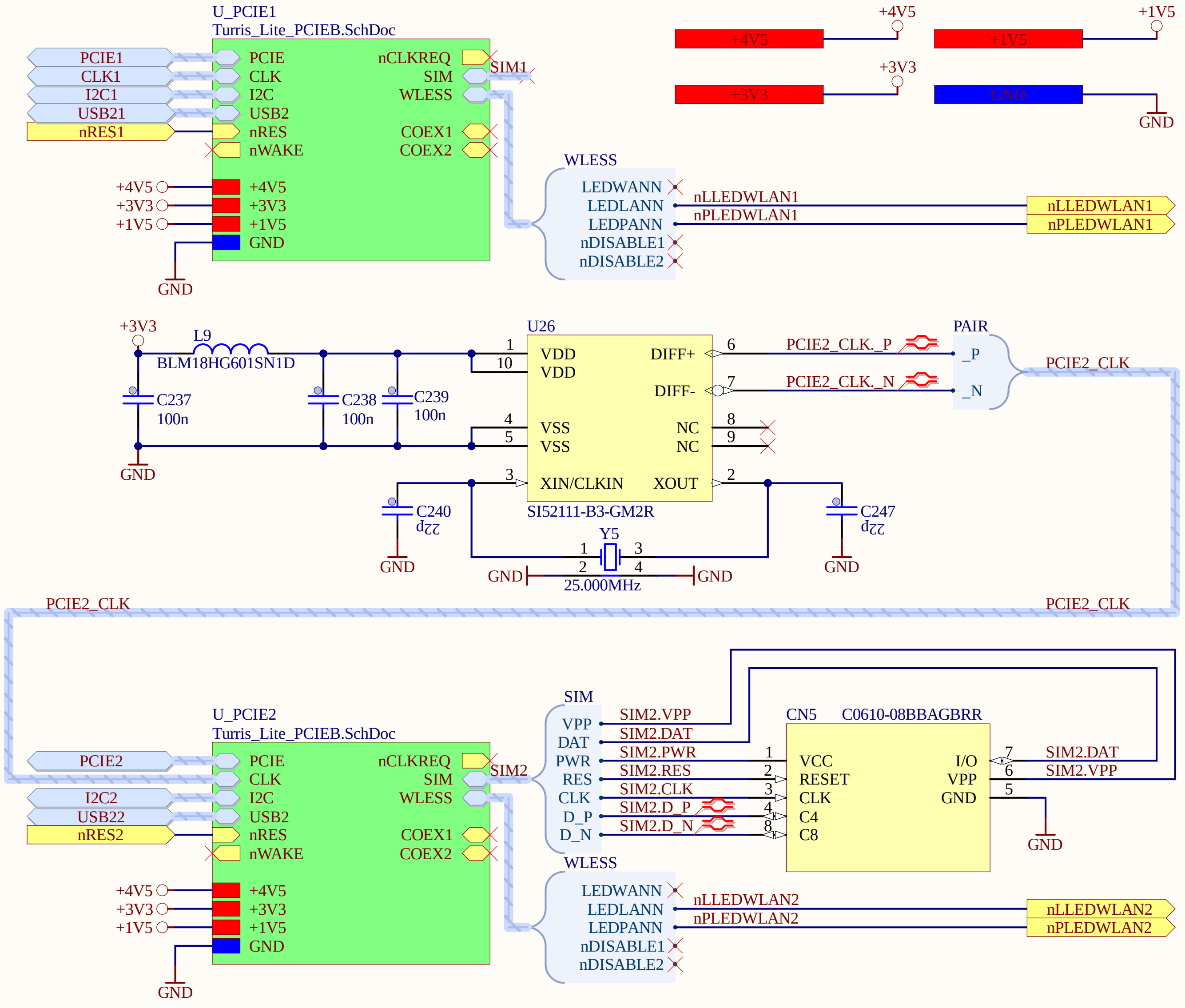
U_PCIE1
Turris_Lite_PCIEB.SchDoc
PCIE1
CLK1
I2C1
USB21
nRES1
PCIE
CLK
I2C
USB2
nRES
nWAKE
nCLKREQ
SIM
WLESS
COEX1
COEX2
SIM1
+4V5
+3V3
+1V5
GND
WLESS
LEDWANN
LEDLANN
LEDPANN
nDISABLE1
nDISABLE2
nLLEDWLAN1
nPLEDWLAN1
+4V5
+1V5
+3V3
GND
U26
+3V3
L9
BLM18HG601SN1D
C237
100n
C238
100n
C239
100n
1
10
VDD
VDD
4
5
VSS
VSS
3
XIN/CLKIN
DIFF+
DIFF-
NC
NC
XOUT
6
7
8
9
2
SI52111-B3-GM2R
PCIE2_CLK._P
PCIE2_CLK._N
PAIR
_P
_N
PCIE2_CLK
C240
22p
C247
22p
Y5
1
3
2
4
25.000MHz
GND
PCIE2_CLK
PCIE2_CLK
U_PCIE2
Turris_Lite_PCIEB.SchDoc
PCIE2
I2C2
USB22
nRES2
SIM2
SIM
VPP
DAT
PWR
RES
CLK
D_P
D_N
SIM2.VPP
SIM2.DAT
SIM2.PWR
SIM2.RES
SIM2.CLK
SIM2.D_P
SIM2.D_N
CN5
C0610-08BBAGBRR
VCC
RESET
CLK
C4
C8
I/O
VPP
GND
SIM2.DAT
SIM2.VPP
nLLEDWLAN2
nPLEDWLAN2

Author: Zbyněk Kos & Tomáš Rykl
Engineer: Zbyněk Kos & Tomáš Rykl
Drawn by: Zbyněk Kos
Checked by: Tomáš Rykl
Approved by: *
http://www.nic.cz

Title:
Turris Omnia - PCIE

Document Number: CZ11NIC230000-9
Revision: 230000
Sheet 9 of 26
Date: * *
Name: Turris_Lite_PCIE.SchDoc

CZ.NIC, z.s.p.o.
Milešovská 5
130 00 Praha 3

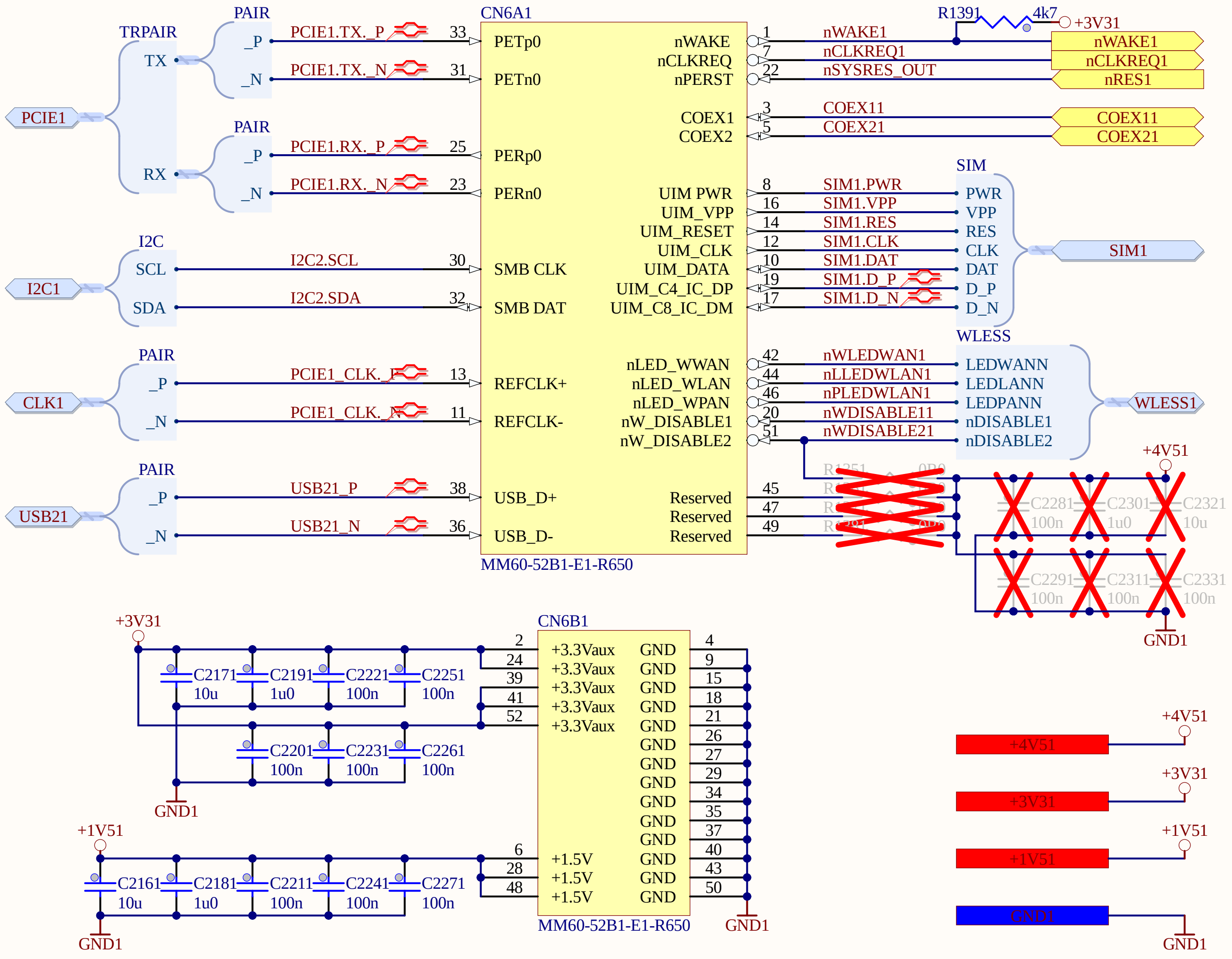
CN6A1
MM60-52B1-E1-R650
PETp0
PETn0
PERp0
PERn0
SMB CLK
SMB DAT
REFCLK+
REFCLK-
USB_D+
USB_D-
nWAKE
nCLKREQ
nPERST
COEX1
COEX2
UIM PWR
UIM_VPP
UIM_RESET
UIM_CLK
UIM_DATA
UIM_C4_IC_DP
UIM_C8_IC_DM
nLED_WWAN
nLED_WLAN
nLED_WPAN
nW_DISABLE1
nW_DISABLE2
Reserved
Reserved
Reserved
PCIE1
TRPAIR
TX
RX
PAIR
_P
_N
PCIE1.TX._P
PCIE1.TX._N
PCIE1.RX._P
PCIE1.RX._N
I2C1
I2C
SCL
SDA
I2C2.SCL
I2C2.SDA
CLK1
PCIE1_CLK._P
PCIE1_CLK._N
USB21
USB21_P
USB21_N
R1391
4k7
+3V31
nWAKE1
nCLKREQ1
nSYSRES_OUT
nRES1
COEX11
COEX21
SIM
SIM1
SIM1.PWR
SIM1.VPP
SIM1.RES
SIM1.CLK
SIM1.DAT
SIM1.D_P
SIM1.D_N
PWR
VPP
RES
CLK
DAT
D_P
D_N
WLESS
WLESS1
nWLEDWAN1
nLLEDWLAN1
nPLEDWLAN1
nWDISABLE11
nWDISABLE21
LEDWANN
LEDLANN
LEDPANN
nDISABLE1
nDISABLE2
R1351
0R0
+4V51
C2281 100n
C2301 1u0
C2321 10u
C2291 100n
C2311 100n
C2331 100n
GND1
CN6B1
MM60-52B1-E1-R650
+3.3Vaux
+1.5V
GND
C2171 10u
C2191 1u0
C2221 100n
C2251 100n
C2201 100n
C2231 100n
C2261 100n
+1V51
C2161 10u
C2181 1u0
C2211 100n
C2241 100n
C2271 100n
+4V51
+3V31
+1V51
GND1

Author: Zbyněk Kos & Tomáš Rykl
Engineer: Zbyněk Kos & Tomáš Rykl
Drawn by: Zbyněk Kos
Checked by: Tomáš Rykl
Approved by: *
http://www.nic.cz

Title:
Turris Omnia - PCIE - Single Slot

Document Number: CZ11NIC230000-10
Revision: 230000
Sheet 10 of 26
Date: * *
Name: Turris_Lite_PCIEB.SchDoc

CZ.NIC, z.s.p.o.
Milešovská 5
130 00 Praha 3

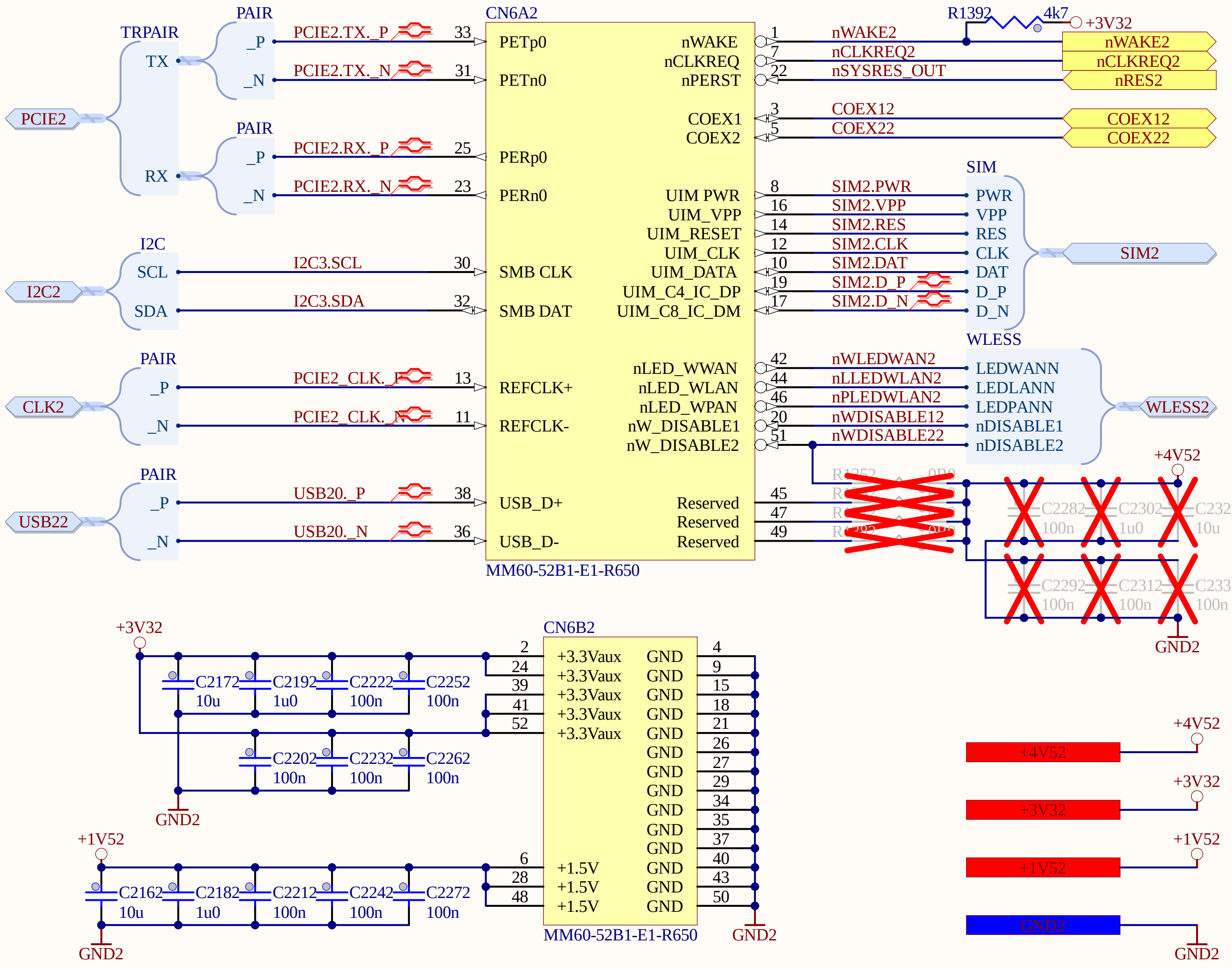
PCIE2
TRPAIR
TX
RX
PAIR
_P
_N
PCIE2.TX._P
PCIE2.TX._N
PCIE2.RX._P
PCIE2.RX._N
CN6A2
33
31
25
23
PETp0
PETn0
PERp0
PERn0
nWAKE
nCLKREQ
nPERST
COEX1
COEX2
1
7
22
3
5
nWAKE2
nCLKREQ2
nSYSRES_OUT
COEX12
COEX22
R1392
4k7
+3V32
nRES2
I2C2
I2C
SCL
SDA
I2C3.SCL
I2C3.SDA
30
32
SMB CLK
SMB DAT
UIM PWR
UIM_VPP
UIM_RESET
UIM_CLK
UIM_DATA
UIM_C4_IC_DP
UIM_C8_IC_DM
8
16
14
12
10
19
17
SIM2.PWR
SIM2.VPP
SIM2.RES
SIM2.CLK
SIM2.DAT
SIM2.D_P
SIM2.D_N
SIM
PWR
VPP
RES
CLK
DAT
D_P
D_N
SIM2
CLK2
PCIE2_CLK._P
PCIE2_CLK._N
13
11
REFCLK+
REFCLK-
nLED_WWAN
nLED_WLAN
nLED_WPAN
nW_DISABLE1
nW_DISABLE2
42
44
46
20
51
nWLEDWAN2
nLLEDWLAN2
nPLEDWLAN2
nWDISABLE12
nWDISABLE22
WLESS
LEDWANN
LEDLANN
LEDPANN
nDISABLE1
nDISABLE2
WLESS2
USB22
USB20._P
USB20._N
38
36
USB_D+
USB_D-
Reserved
Reserved
Reserved
45
47
49
R1252
0R0
+4V52
C2282
100n
C2302
1u0
C2322
10u
C2292
100n
C2312
100n
C2332
100n
GND2
MM60-52B1-E1-R650
+3V32
C2172
10u
C2192
1u0
C2222
100n
C2252
100n
C2202
100n
C2232
100n
C2262
100n
GND2
CN6B2
2
24
39
41
52
+3.3Vaux
+3.3Vaux
+3.3Vaux
+3.3Vaux
+3.3Vaux
GND
4
9
15
18
21
26
27
29
34
35
37
40
43
50
+1V52
C2162
10u
C2182
1u0
C2212
100n
C2242
100n
C2272
100n
GND2
6
28
48
+1.5V
+1.5V
+1.5V
MM60-52B1-E1-R650
GND2
+4V52
+4V52
+3V32
+3V32
+1V52
+1V52
GND2
GND2
1
2
3
4
A
B
C
D

Author: Zbyněk Kos & Tomáš Rykl
Engineer: Zbyněk Kos & Tomáš Rykl
Drawn by: Zbyněk Kos
Checked by: Tomáš Rykl
Approved by: *
http://www.nic.cz

Title:
Turris Omnia - PCIE - Single Slot
Document Number: CZ11NIC230000-10
Revision: 230000
Sheet 10 of 26
Date: * *
Name: Turris_Lite_PCIEB.SchDoc

CZ.NIC, z.s.p.o.
Milešovská 5
130 00 Praha 3

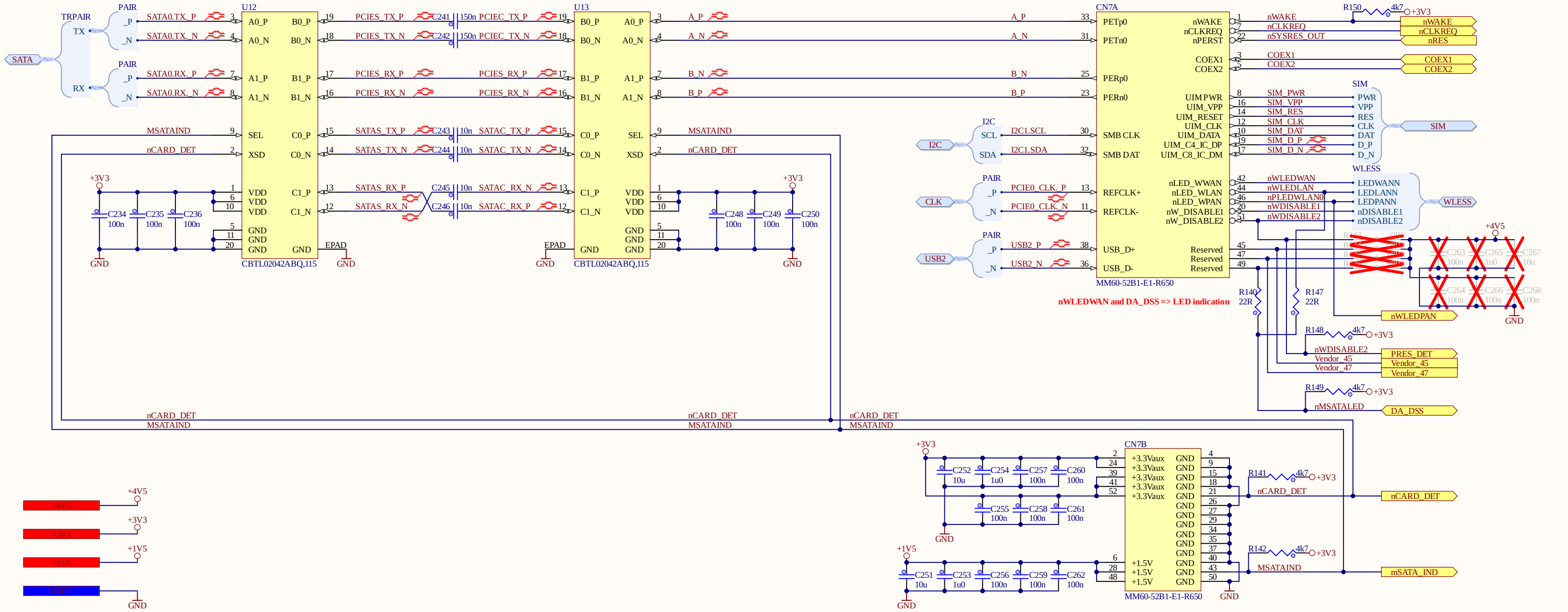
TRPAIR
TX
RX
SATA
PAIR
SATA0.TX_P
SATA0.TX_N
SATA0.RX_P
SATA0.RX_N
U12
A0_P
A0_N
A1_P
A1_N
B0_P
B0_N
B1_P
B1_N
SEL
XSD
C0_P
C0_N
C1_P
C1_N
VDD
GND
EPAD
CBTL02042ABQ,115
PCIES_TX_P
PCIES_TX_N
PCIES_RX_P
PCIES_RX_N
C241 150n
C242 150n
PCIEC_TX_P
PCIEC_TX_N
SATAS_TX_P
SATAS_TX_N
SATAS_RX_P
SATAS_RX_N
C243 10n
C244 10n
C245 10n
C246 10n
SATAC_TX_P
SATAC_TX_N
SATAC_RX_N
SATAC_RX_P
U13
CBTL02042ABQ,115
MSATAIND
nCARD_DET
+3V3
C234 100n
C235 100n
C236 100n
C248 100n
C249 100n
C250 100n
GND
A_P
A_N
B_N
B_P
CN7A
PETp0
PETn0
PERp0
PERn0
SMB CLK
SMB DAT
REFCLK+
REFCLK-
USB_D+
USB_D-
nWAKE
nCLKREQ
nPERST
COEX1
COEX2
UIM PWR
UIM_VPP
UIM_RESET
UIM_CLK
UIM_DATA
UIM_C4_IC_DP
UIM_C8_IC_DM
nLED_WWAN
nLED_WLAN
nLED_WPAN
nW_DISABLE1
nW_DISABLE2
Reserved
MM60-52B1-E1-R650
I2C
SCL
SDA
I2C1.SCL
I2C1.SDA
CLK
PCIE0_CLK_P
PCIE0_CLK_N
USB2
USB2_P
USB2_N
nSYSRES_OUT
SIM
SIM_PWR
SIM_VPP
SIM_RES
SIM_CLK
SIM_DAT
SIM_D_P
SIM_D_N
PWR
VPP
RES
DAT
D_P
D_N
WLESS
nWLEDWAN
nWLEDLAN
nPLEDWLAN0
nWDISABLE1
nWDISABLE2
LEDWANN
LEDLANN
LEDPANN
nDISABLE1
nDISABLE2
R150 4k7
+4V5
C263 100n
C265 1u0
C267 10u
C264 100n
C266 100n
C268 100n
R146 22R
R147 22R
nWLEDPAN
R148 4k7
PRES_DET
Vendor_45
Vendor_47
R149 4k7
nMSATALED
DA_DSS
nWLEDWAN and DA_DSS => LED indication
CN7B
+3.3Vaux
+1.5V
C252 10u
C254 1u0
C257 100n
C260 100n
C255 100n
C258 100n
C261 100n
+1V5
C251 10u
C253 1u0
C256 100n
C259 100n
C262 100n
R141 4k7
R142 4k7
mSATA_IND
+4V5
+3V3
+1V5
GND

Author: Zbyněk Kos & Tomáš Rykl
Engineer: Zbyněk Kos & Tomáš Rykl
Drawn by: Zbyněk Kos
Checked by: Tomáš Rykl
Approved by: *
http://www.nic.cz

Title: Turris Omnia - mSATA/PCIE Slot
Document Number: CZ11NIC230000-11 Revision: 230000
Sheet 11 of 26 Date: * *
Name: Turris_Lite_mSATA.SchDoc

CZ.NIC, z.s.p.o.
Milešovská 5
130 00 Praha 3

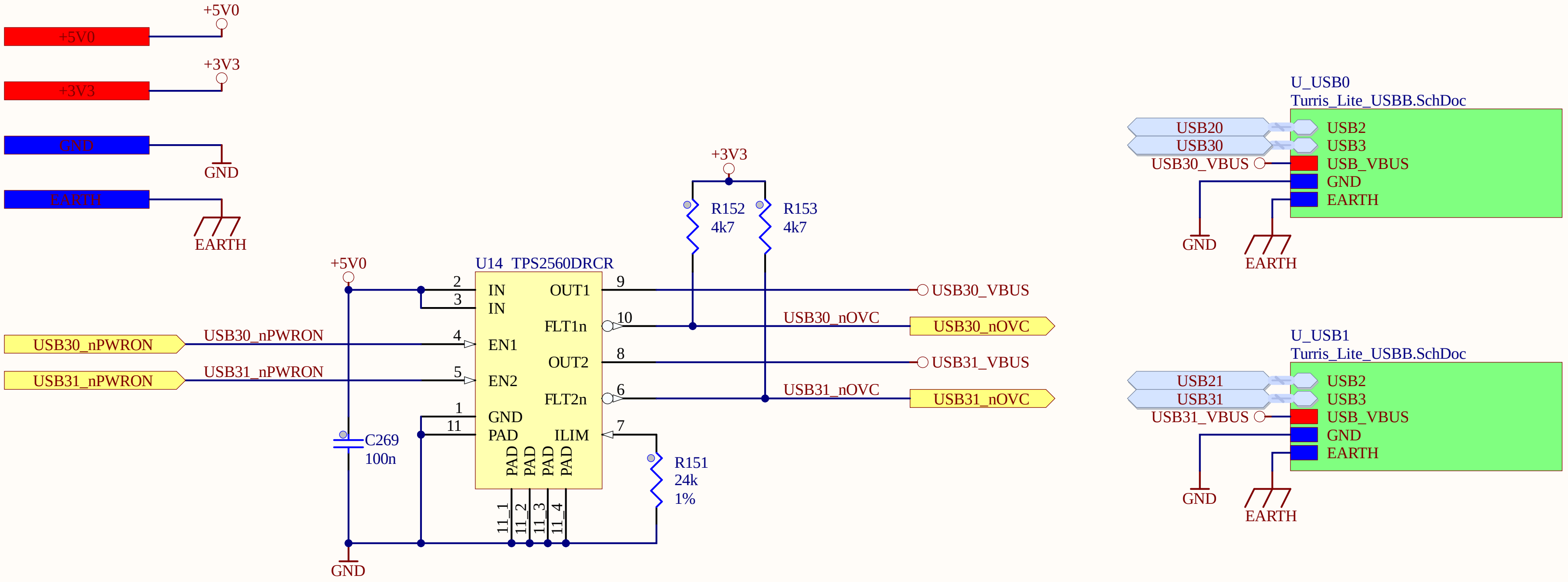
+5V0
+3V3
GND
EARTH
+5V0
+3V3
GND
EARTH
U14 TPS2560DRCR
IN
IN
EN1
EN2
GND
PAD
OUT1
FLT1n
OUT2
FLT2n
ILIM
PAD
PAD
PAD
PAD
11_1
11_2
11_3
11_4
2
3
4
5
1
11
9
10
8
6
7
+5V0
C269
100n
GND
+3V3
R152
4k7
R153
4k7
R151
24k
1%
USB30_nPWRON
USB31_nPWRON
USB30_nPWRON
USB31_nPWRON
USB30_VBUS
USB30_nOVC
USB30_nOVC
USB31_VBUS
USB31_nOVC
USB31_nOVC
U_USB0
Turris_Lite_USBB.SchDoc
USB20
USB30
USB30_VBUS
USB2
USB3
USB_VBUS
GND
EARTH
GND
EARTH
U_USB1
Turris_Lite_USBB.SchDoc
USB21
USB31
USB31_VBUS
USB2
USB3
USB_VBUS
GND
EARTH
GND
EARTH

Author:	Zbyněk Kos & Tomáš Rykl
Engineer:	Zbyněk Kos & Tomáš Rykl
Drawn by:	Zbyněk Kos
Checked by:	Tomáš Rykl
Approved by:	*

http://www.nic.cz

Title:
Turris Omnia - USB 3.0

Document Number: CZ11NIC230000-12
Revision: 230000
Sheet 12 of 26
Date: * *
Name: Turris_Lite_USB.SchDoc

CZ.NIC, z.s.p.o.
Milešovská 5
130 00 Praha 3

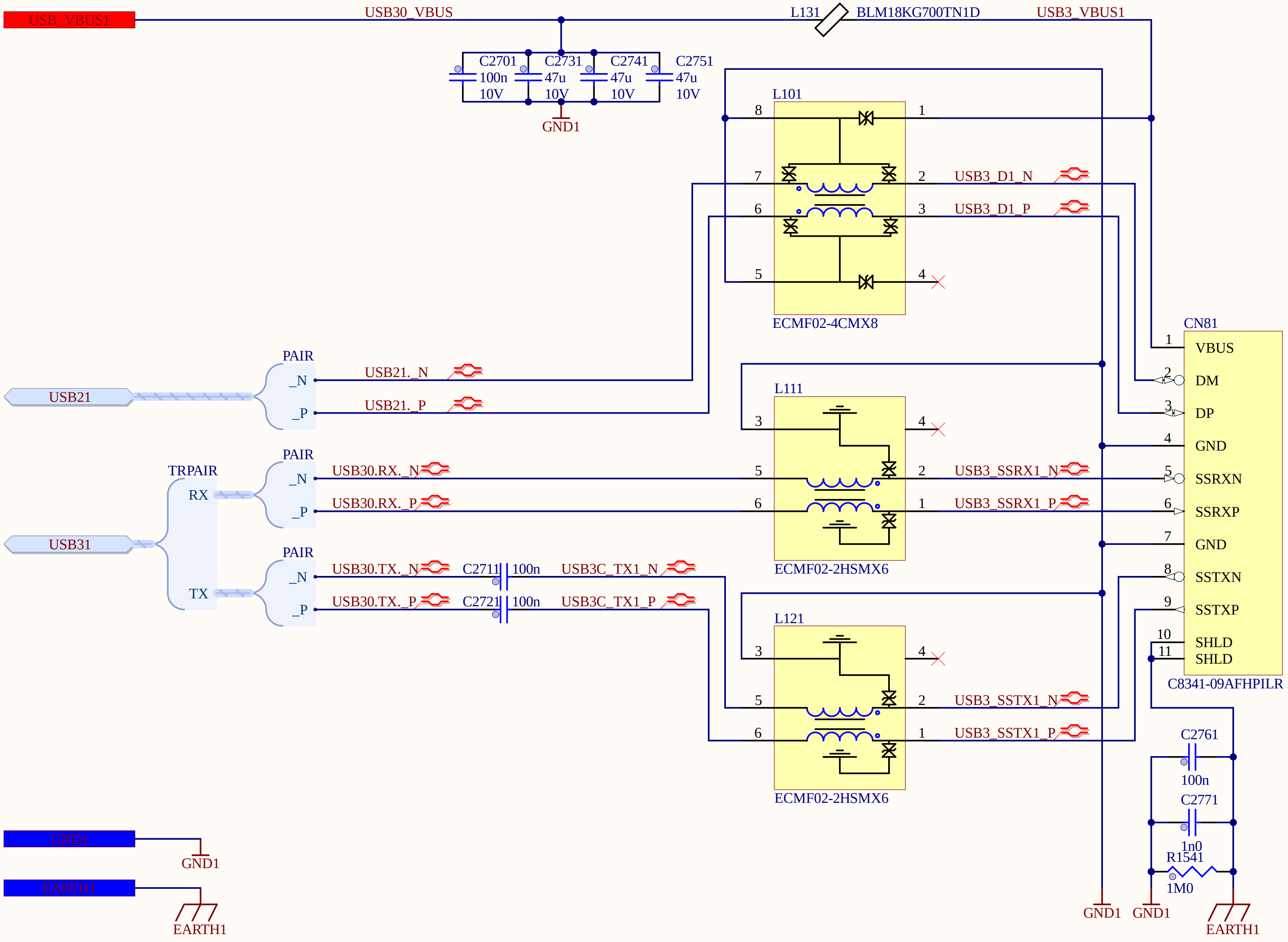
USB_VBUS1
USB30_VBUS
L131
BLM18KG700TN1D
USB3_VBUS1
C2701
100n
10V
C2731
47u
10V
C2741
47u
10V
C2751
47u
10V
GND1
L101
8
1
7
2
6
3
5
4
USB3_D1_N
USB3_D1_P
ECMF02-4CMX8
CN81
1 VBUS
2 DM
3 DP
4 GND
5 SSRXN
6 SSRXP
7 GND
8 SSTXN
9 SSTXP
10 SHLD
11 SHLD
C8341-09AFHPILR
PAIR
_N
_P
USB21._N
USB21._P
USB21
L111
3
4
5
2
6
1
USB3_SSRX1_N
USB3_SSRX1_P
ECMF02-2HSMX6
TRPAIR
RX
TX
USB31
USB30.RX._N
USB30.RX._P
USB30.TX._N
USB30.TX._P
C2711
100n
C2721
100n
USB3C_TX1_N
USB3C_TX1_P
L121
USB3_SSTX1_N
USB3_SSTX1_P
ECMF02-2HSMX6
C2761
100n
C2771
1n0
R1541
1M0
GND1
GND1
EARTH1
GND1
EARTH1
GND1
EARTH1

Author:	Zbyněk Kos & Tomáš Rykl
Engineer:	Zbyněk Kos & Tomáš Rykl
Drawn by:	Zbyněk Kos
Checked by:	Tomáš Rykl
Approved by:	*

http://www.nic.cz

Title: Turris Omnia - USB 3.0 - Single Slot

Document Number: CZ11NIC230000-13
Revision: 230000
Sheet 13 of 26
Date: * *
Name: Turris_Lite_USBB.SchDoc

CZ.NIC, z.s.p.o.
Milešovská 5
130 00 Praha 3

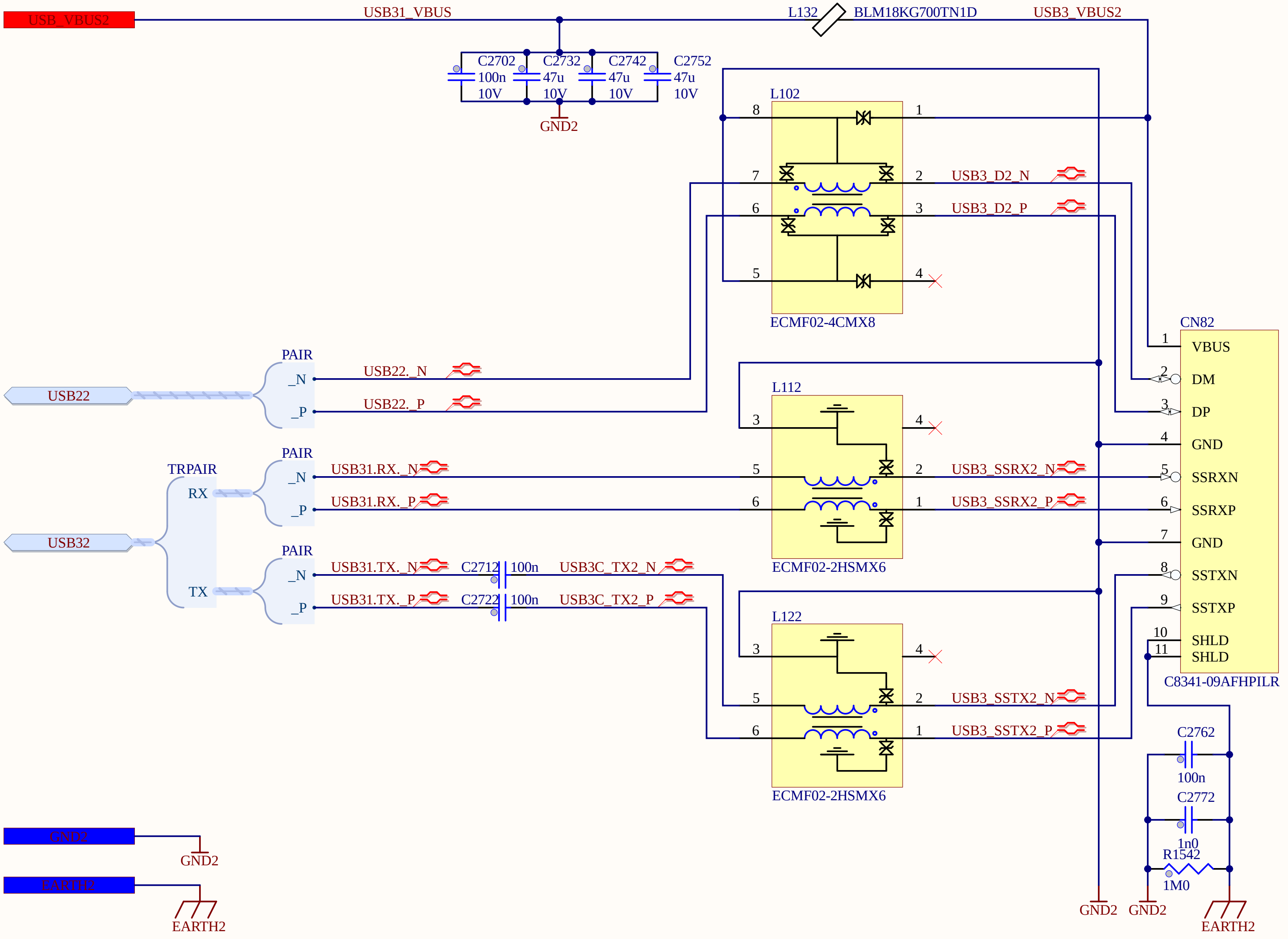
1
2
3
4
A
B
C
D
USB_VBUS2
USB31_VBUS
L132
BLM18KG700TN1D
USB3_VBUS2
C2702
100n
10V
C2732
47u
10V
C2742
47u
10V
C2752
47u
10V
GND2
L102
8
1
7
2
6
3
5
4
USB3_D2_N
USB3_D2_P
ECMF02-4CMX8
PAIR
_N
_P
USB22._N
USB22._P
USB22
L112
3
4
5
2
6
1
USB3_SSRX2_N
USB3_SSRX2_P
ECMF02-2HSMX6
TRPAIR
RX
TX
PAIR
USB31.RX._N
USB31.RX._P
USB32
PAIR
USB31.TX._N
USB31.TX._P
C2712
100n
C2722
100n
USB3C_TX2_N
USB3C_TX2_P
L122
3
4
5
2
6
1
USB3_SSTX2_N
USB3_SSTX2_P
ECMF02-2HSMX6
CN82
1 VBUS
2 DM
3 DP
4 GND
5 SSRXN
6 SSRXP
7 GND
8 SSTXN
9 SSTXP
10 SHLD
11 SHLD
C8341-09AFHPILR
C2762
100n
C2772
1n0
R1542
1M0
GND2
GND2
EARTH2
GND2
GND2
EARTH2
EARTH2

Author: Zbyněk Kos & Tomáš Rykl
Engineer: Zbyněk Kos & Tomáš Rykl
Drawn by: Zbyněk Kos
Checked by: Tomáš Rykl
Approved by: *
http://www.nic.cz

Title:
Turris Omnia - USB 3.0 - Single Slot

Document Number: CZ11NIC230000-13
Revision: 230000
Sheet 13 of 26
Date: * *
Name: Turris_Lite_USBB.SchDoc

CZ.NIC, z.s.p.o.
Milešovská 5
130 00 Praha 3

1
2
3
4

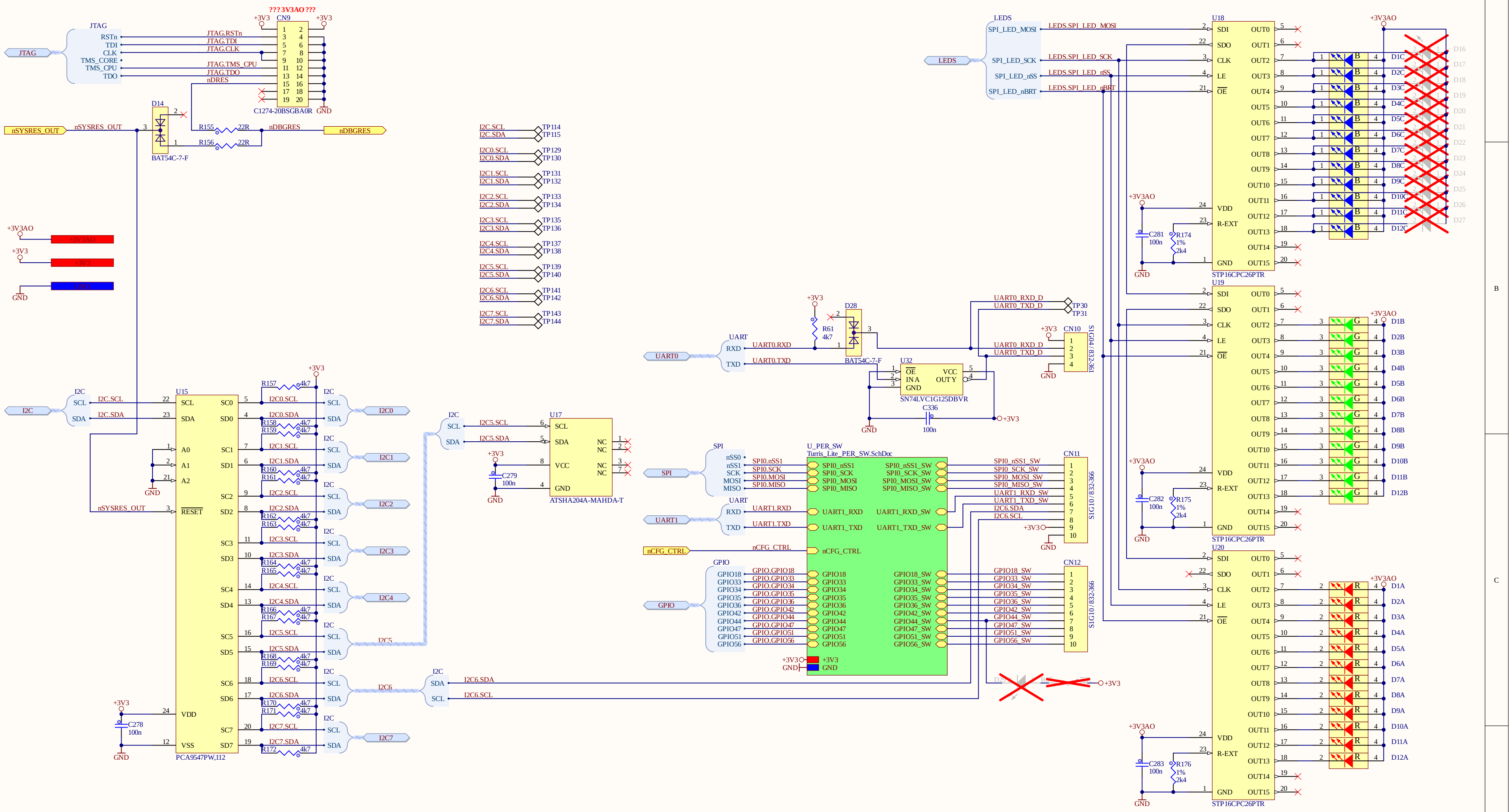
JTAG
RSTn
TDI
CLK
TMS_CORE
TMS_CPU
TDO
??? 3V3AO ???
+3V3
CN9
C1274-20BSGBA0R
GND
JTAG.RSTn
JTAG.TDI
JTAG.CLK
JTAG.TMS_CPU
JTAG.TDO
nDRES
D14
BAT54C-7-F
nSYSRES_OUT
R155 22R
R156 22R
nDBGRES
+3V3AO
GND
I2C
SCL
SDA
I2C.SCL
I2C.SDA
U15
PCA9547PW,112
SC0
SD0
SC1
SD1
SC2
SD2
SC3
SD3
SC4
SD4
SC5
SD5
SC6
SD6
SC7
SD7
A0
A1
A2
RESET
VDD
VSS
C278 100n
R157 4k7
R158 4k7
R159 4k7
I2C0
I2C1
I2C2
I2C3
I2C4
I2C5
I2C6
I2C7
TP114
TP115
TP129
TP130
TP131
TP132
TP133
TP134
TP135
TP136
TP137
TP138
TP139
TP140
TP141
TP142
TP143
TP144
U17
ATSHA204A-MAHDA-T
C279 100n
UART
RXD
TXD
UART0
UART0.RXD
UART0.TXD
R61 4k7
D28
BAT54C-7-F
U32
SN74LVC1G125DBVR
C336 100n
UART0_RXD_D
UART0_TXD_D
TP30
TP31
CN10
S1G04/832-366
SPI
nSS0
nSS1
SCK
MOSI
MISO
U_PER_SW
Turris_Lite_PER_SW.SchDoc
UART1
nCFG_CTRL
GPIO
CN11
S1G10/832-366
CN12
S1G10/832-366
LEDS
SPI_LED_MOSI
SPI_LED_SCK
SPI_LED_nSS
SPI_LED_nBRT
U18
U19
U20
STP16CPC26PTR
SDI
SDO
CLK
LE
OE
R-EXT
OUT0
OUT15
C281 100n
R174 1% 2k4
C282 100n
R175 1% 2k4
C283 100n
R176 1% 2k4
D1C
D12C
D1B
D12B
D1A
D12A
D16
D27

Author: Zbyněk Kos & Tomáš Rykl
Engineer: Zbyněk Kos & Tomáš Rykl
Drawn by: Zbyněk Kos
Checked by: Tomáš Rykl
Approved by: *
http://www.nic.cz

Title: Turris Omnia - Peripherals & JTAG
Document Number: CZ11NIC230000-14
Revision: 230000
Sheet 14 of 26
Date: * *
Name: Turris_Lite_PER.SchDoc

CZ.NIC, z.s.p.o.
Milešovská 5
130 00 Praha 3

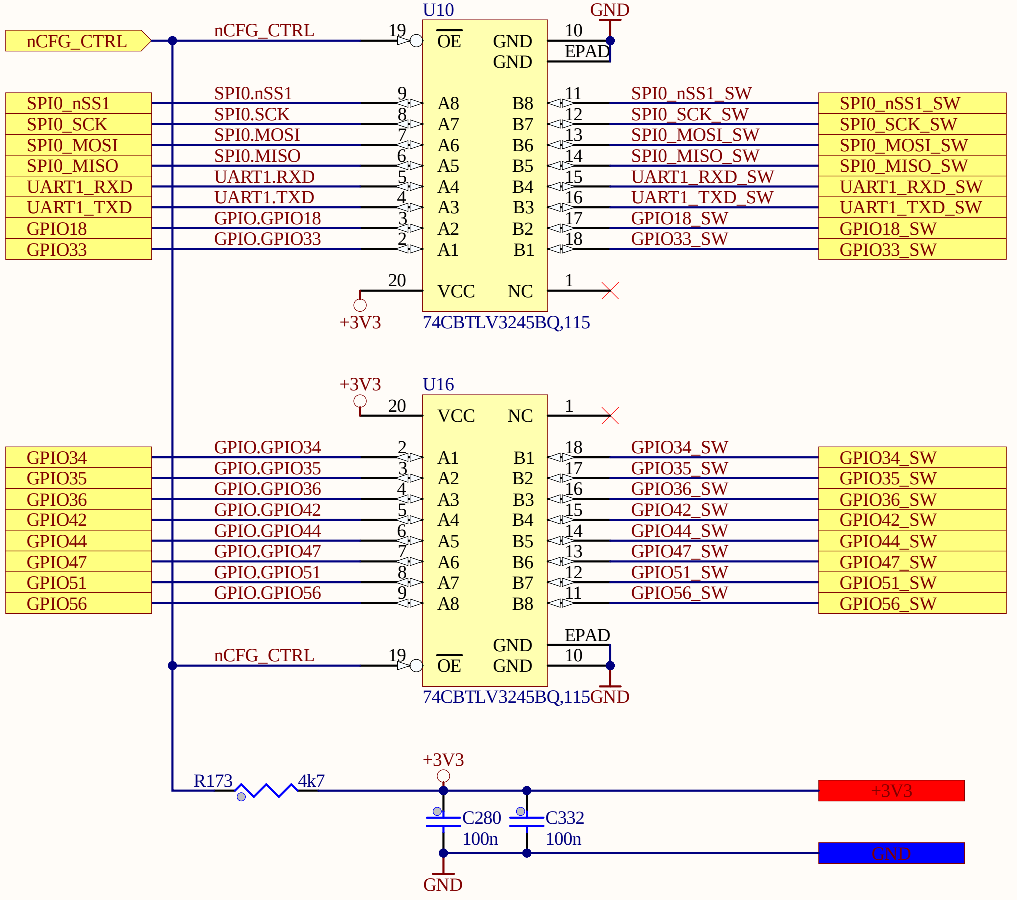
U10
GND
nCFG_CTRL
nCFG_CTRL
19
OE
GND
GND
10
EPAD
SPI0_nSS1
SPI0_SCK
SPI0_MOSI
SPI0_MISO
UART1_RXD
UART1_TXD
GPIO18
GPIO33
SPI0.nSS1
SPI0.SCK
SPI0.MOSI
SPI0.MISO
UART1.RXD
UART1.TXD
GPIO.GPIO18
GPIO.GPIO33
9
8
7
6
5
4
3
2
A8
A7
A6
A5
A4
A3
A2
A1
B8
B7
B6
B5
B4
B3
B2
B1
11
12
13
14
15
16
17
18
SPI0_nSS1_SW
SPI0_SCK_SW
SPI0_MOSI_SW
SPI0_MISO_SW
UART1_RXD_SW
UART1_TXD_SW
GPIO18_SW
GPIO33_SW
SPI0_nSS1_SW
SPI0_SCK_SW
SPI0_MOSI_SW
SPI0_MISO_SW
UART1_RXD_SW
UART1_TXD_SW
GPIO18_SW
GPIO33_SW
20
VCC
NC
1
+3V3
74CBTLV3245BQ,115
+3V3
U16
20
VCC
NC
1
GPIO34
GPIO35
GPIO36
GPIO42
GPIO44
GPIO47
GPIO51
GPIO56
GPIO.GPIO34
GPIO.GPIO35
GPIO.GPIO36
GPIO.GPIO42
GPIO.GPIO44
GPIO.GPIO47
GPIO.GPIO51
GPIO.GPIO56
2
3
4
5
6
7
8
9
A1
A2
A3
A4
A5
A6
A7
A8
B1
B2
B3
B4
B5
B6
B7
B8
18
17
16
15
14
13
12
11
GPIO34_SW
GPIO35_SW
GPIO36_SW
GPIO42_SW
GPIO44_SW
GPIO47_SW
GPIO51_SW
GPIO56_SW
GPIO34_SW
GPIO35_SW
GPIO36_SW
GPIO42_SW
GPIO44_SW
GPIO47_SW
GPIO51_SW
GPIO56_SW
nCFG_CTRL
19
OE
GND
GND
EPAD
10
74CBTLV3245BQ,115
GND
+3V3
R173
4k7
+3V3
C280
100n
C332
100n
GND
GND

Author:	Zbyněk Kos & Tomáš Rykl
Engineer:	Zbyněk Kos & Tomáš Rykl
Drawn by:	Zbyněk Kos
Checked by:	Tomáš Rykl
Approved by:	*

http://www.nic.cz

Title:
Turris Omnia - PER - SW

Document Number: CZ11NIC230000-15 Revision: 230000
Sheet 15 of 26 Date: * *
Name: Turris_Lite_PER_SW.SchDoc

CZ.NIC, z.s.p.o.
Milešovská 5
130 00 Praha 3

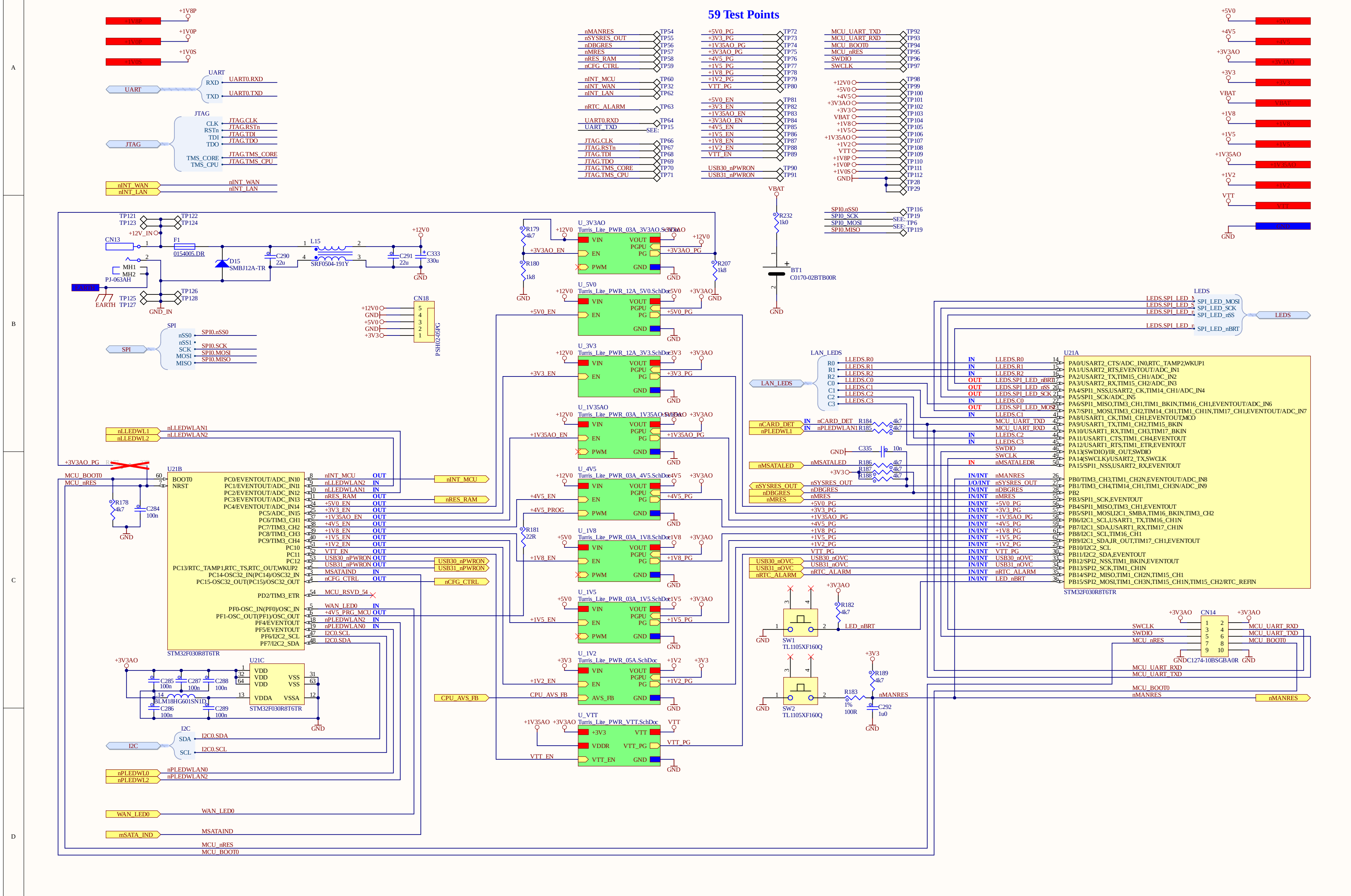
59 Test Points
UART
RXD
TXD
UART0.RXD
UART0.TXD
JTAG
CLK
RSTn
TDI
TDO
TMS_CORE
TMS_CPU
nINT_WAN
nINT_LAN
+1V8P
+1V0P
+1V0S
+5V0
+4V5
+3V3AO
+3V3
VBAT
+1V8
+1V5
+1V35AO
+1V2
VTT
GND
CN13
PJ-063AH
F1
0154005.DR
D15
SMBJ12A-TR
L15
SRF0504-191Y
C290 22u
C291 22u
C333 330u
+12V0
+12V_IN
GND_IN
EARTH
MH1
MH2
TP121
TP122
TP123
TP124
TP125
TP126
TP127
TP128
SPI
nSS0
nSS1
SCK
MOSI
MISO
SPI0.nSS0
SPI0.SCK
SPI0.MOSI
SPI0.MISO
CN18
PSH02-05PG
U_3V3AO
Turris_Lite_PWR_03A_3V3AO.SchDoc
U_5V0
Turris_Lite_PWR_12A_5V0.SchDoc
U_3V3
Turris_Lite_PWR_12A_3V3.SchDoc
U_1V35AO
Turris_Lite_PWR_03A_1V35AO.SchDoc
U_4V5
Turris_Lite_PWR_03A_4V5.SchDoc
U_1V8
Turris_Lite_PWR_03A_1V8.SchDoc
U_1V5
Turris_Lite_PWR_03A_1V5.SchDoc
U_1V2
Turris_Lite_PWR_05A.SchDoc
U_VTT
Turris_Lite_PWR_VTT.SchDoc
VIN
VOUT
PGPU
PG
EN
PWM
GND
AVS_FB
VDDR
VTT_PG
VTT_EN
CPU_AVS_FB
R179 4k7
R180 1k8
R207 1k8
R181 22R
R232 1k0
BT1
C0170-02BTB00R
U21B
BOOT0
NRST
STM32F030R8T6TR
U21C
VDD
VSS
VDDA
VSSA
BLM18HG601SN1D
C284 100n
C285 100n
C286 100n
C287 100n
C288 100n
C289 100n
R178 4k7
I2C
SDA
SCL
I2C0.SDA
I2C0.SCL
nLLEDWL1
nLLEDWL2
nPLEDWL0
nPLEDWL2
WAN_LED0
mSATA_IND
MSATAIND
MCU_nRES
MCU_BOOT0
+3V3AO_PG
nINT_MCU
nRES_RAM
USB30_nPWRON
USB31_nPWRON
nCFG_CTRL
MCU_RSVD_54
LAN_LEDS
LEDS
SPI_LED_MOSI
SPI_LED_SCK
SPI_LED_nSS
SPI_LED_nBRT
U21A
STM32F030R8T6TR
nCARD_DET
nPLEDWL1
R184 4k7
R185 4k7
C335 10n
nMSATALED
R186 4k7
R187 4k7
R188 4k7
nSYSRES_OUT
nDBGRES
nMRES
USB30_nOVC
USB31_nOVC
nRTC_ALARM
SW1
TL1105XF160Q
R182 4k7
LED_nBRT
SW2
TL1105XF160Q
R183 1% 100R
R189 4k7
C292 1u0
nMANRES
CN14
C1274-10BSGBA0R
SWCLK
SWDIO
MCU_UART_RXD
MCU_UART_TXD
MCU_BOOT0

Author:	Zbyněk Kos & Tomáš Rykl	Title: Turris Omnia - Power & Test	CZ.NIC, z.s.p.o. Milešovská 5 130 00 Praha 3
Engineer:	Zbyněk Kos & Tomáš Rykl	Document Number: CZ11NIC230000-16	Revision: 230000
Drawn by:	Zbyněk Kos	Sheet 16 of 26	Date: * *
Checked by:	Tomáš Rykl	Name: Turris_Lite_PWR.SchDoc	
Approved by:	*		
http://www.nic.cz			

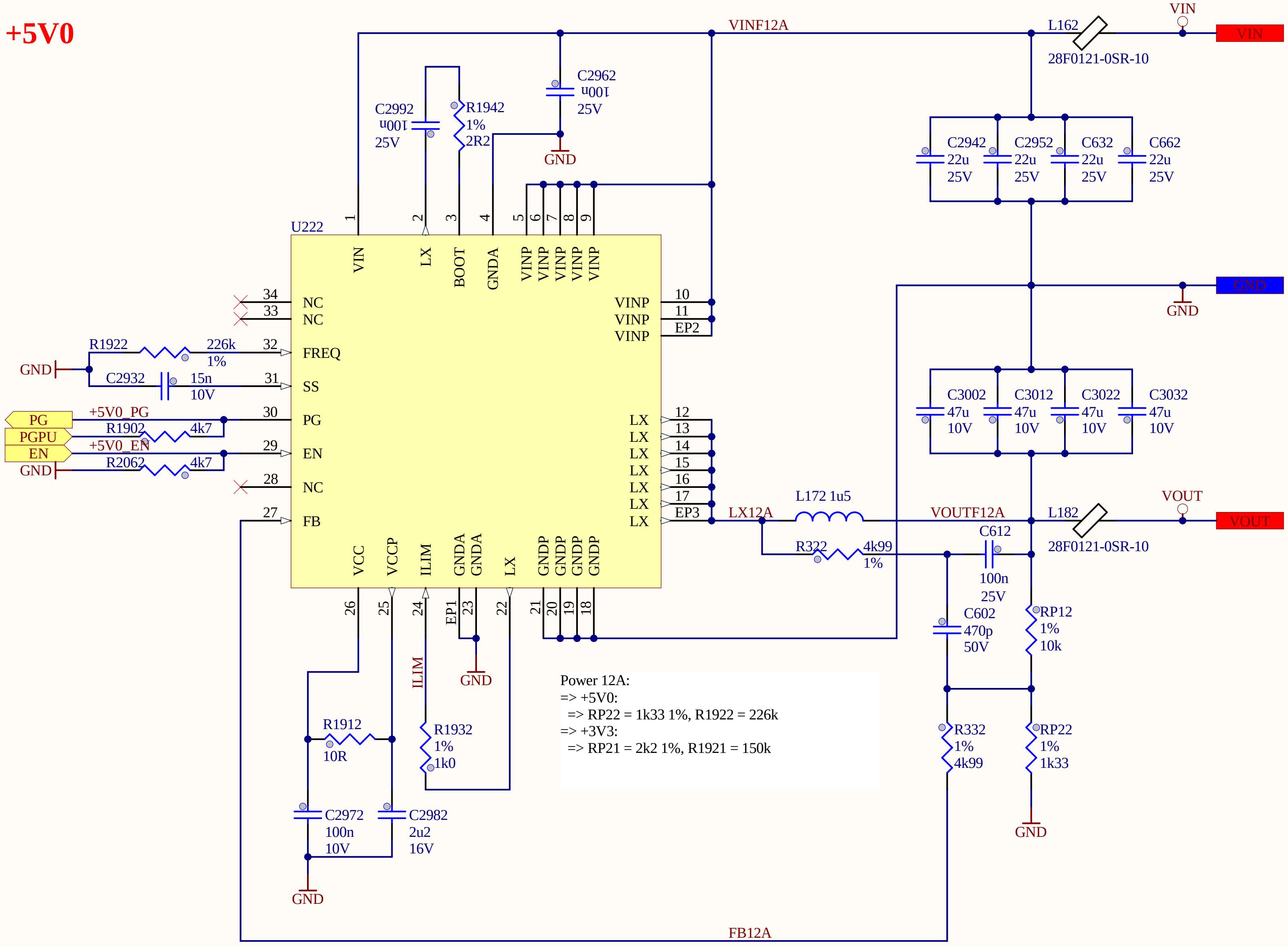
+5V0
VINF12A
VIN
L162
28F0121-0SR-10
VIN
C2962
100n
25V
GND
C2992
100n
25V
R1942
1%
2R2
C2942
22u
25V
C2952
22u
25V
C632
22u
25V
C662
22u
25V
U222
VIN
LX
BOOT
GNDA
VINP
VINP
VINP
VINP
VINP
1
2
3
4
5
6
7
8
9
NC
NC
FREQ
SS
PG
EN
NC
FB
34
33
32
31
30
29
28
27
VINP
VINP
VINP
10
11
EP2
GND
GND
R1922
226k
1%
GND
C2932
15n
10V
PG
PGPU
EN
GND
+5V0_PG
R1902
4k7
+5V0_EN
R2062
4k7
C3002
47u
10V
C3012
47u
10V
C3022
47u
10V
C3032
47u
10V
LX
LX
LX
LX
LX
LX
LX
12
13
14
15
16
17
EP3
LX12A
L172 1u5
VOUTF12A
L182
28F0121-0SR-10
VOUT
VOUT
C612
100n
25V
R322
4k99
1%
VCC
VCCP
ILIM
GNDA
GNDA
LX
GNDP
GNDP
GNDP
GNDP
26
25
24
EP1
23
22
21
20
19
18
ILIM
GND
C602
470p
50V
RP12
1%
10k
R1912
10R
R1932
1%
1k0
R332
1%
4k99
RP22
1%
1k33
GND
C2972
100n
10V
C2982
2u2
16V
GND
FB12A

Power 12A:
=> +5V0:
=> RP22 = 1k33 1%, R1922 = 226k
=> +3V3:
=> RP21 = 2k2 1%, R1921 = 150k

Author: Zbyněk Kos & Tomáš Rykl
Engineer: Zbyněk Kos & Tomáš Rykl
Drawn by: Zbyněk Kos
Checked by: Tomáš Rykl
Approved by: *
http://www.nic.cz

Title:
Turris Omnia - Power - 12A Regulator
Document Number: CZ11NIC230000-17
Revision: 230000
Sheet 17 of 26
Date: * *
Name: Turris_Lite_PWR_12A_5V0.SchDoc

CZ.NIC, z.s.p.o.
Milešovská 5
130 00 Praha 3

cz.nic

+3V3

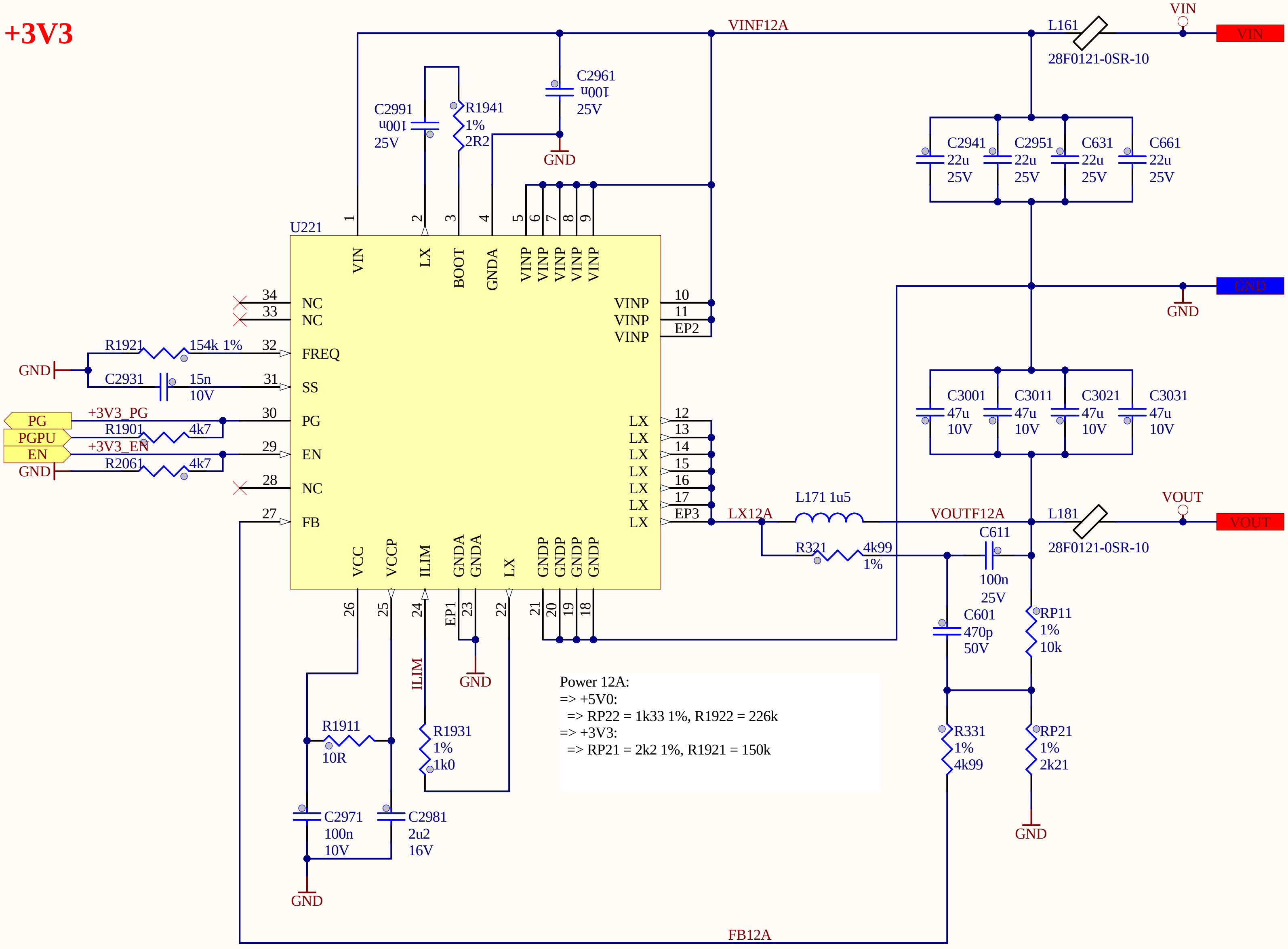
VINF12A
L161
28F0121-0SR-10
VIN
VIN
C2961
100n
25V
C2991
100n
25V
R1941
1%
2R2
GND
C2941
22u
25V
C2951
22u
25V
C631
22u
25V
C661
22u
25V
U221
1 2 3 4 5 6 7 8 9
VIN
LX
BOOT
GNDA
VINP
VINP
VINP
VINP
VINP
GND
GND
34 NC
33 NC
32 FREQ
31 SS
30 PG
29 EN
28 NC
27 FB
VINP 10
VINP 11
VINP EP2
R1921
154k 1%
C2931
15n
10V
GND
PG
PGPU
EN
GND
+3V3_PG
R1901
4k7
+3V3_EN
R2061
4k7
C3001
47u
10V
C3011
47u
10V
C3021
47u
10V
C3031
47u
10V
LX 12
LX 13
LX 14
LX 15
LX 16
LX 17
LX EP3
LX12A
L171 1u5
VOUTF12A
L181
28F0121-0SR-10
VOUT
VOUT
R321
4k99
1%
C611
100n
25V
C601
470p
50V
RP11
1%
10k
VCC
VCCP
ILIM
GNDA
GNDA
LX
GNDP
GNDP
GNDP
GNDP
26 25 24 EP1 23 22 21 20 19 18
ILIM
GND
R1911
10R
R1931
1%
1k0
C2971
100n
10V
C2981
2u2
16V
GND
R331
1%
4k99
RP21
1%
2k21
GND
FB12A

Power 12A:
=> +5V0:
=> RP22 = 1k33 1%, R1922 = 226k
=> +3V3:
=> RP21 = 2k2 1%, R1921 = 150k

Author: Zbyněk Kos & Tomáš Rykl
Engineer: Zbyněk Kos & Tomáš Rykl
Drawn by: Zbyněk Kos
Checked by: Tomáš Rykl
Approved by: *
http://www.nic.cz

Title: Turris Omnia - Power - 12A Regulator
Document Number: CZ11NIC230000-18
Revision: 230000
Sheet 18 of 26
Date: * *
Name: Turris_Lite_PWR_12A_3V3.SchDoc

CZ.NIC, z.s.p.o.
Milešovská 5
130 00 Praha 3

+4V5

Power 03A:
=> +4V5:
  => VIN = +12V, PGPU = +3V3AO, RPGPU = 4k7
  => RVSET = 470k 1%, RPSET = 11k 1%
=> +3V3AO:
  => VIN = +12V0, PGPU = +12V0, RPGPU = 4k7
  => RVSET = 270k 1%, RPSET = 0R0
  => EN_PD = NA
=> +1V35AO:
  => VIN = +12V0, PGPU = +3V3AO, RPGPU = 4k7
  => RVSET = 30k1 1%, RPSET = 11k 1%
=> +1V8:
  => VIN = +5V0, PGPU = +3V3AO, RPGPU = 4k7
  => RVSET = 51k 1%, RPSET = 0R0%
=> +1V5:
  => VIN = +5V0, PGPU = +3V3AO, RPGPU = 4k7
  => RVSET = 30k1 1%, RPSET = 0R0

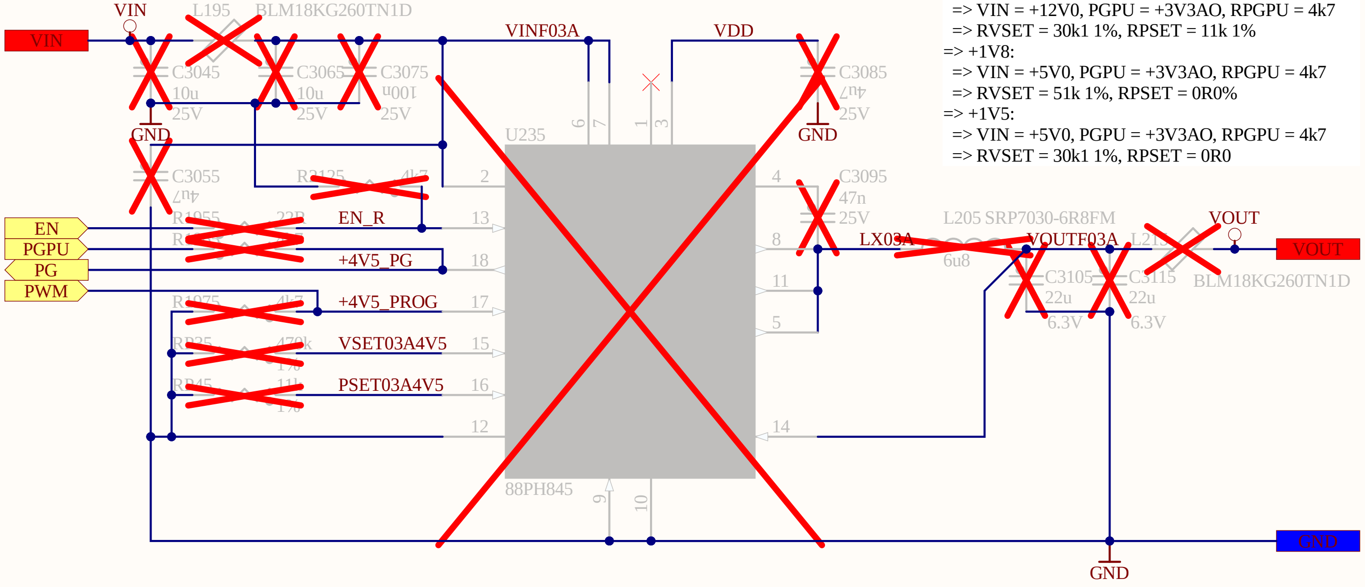
VIN
L195 BLM18KG260TN1D
VINF03A
VDD
C3045 10u 25V
C3065 10u 25V
C3075 100n 25V
C3085 4u7 25V
GND
U235
C3055 4u7
R3125 4k7
C3095 47n 25V
EN
PGPU
PG
PWM
R1055 22R
EN_R
+4V5_PG
R1075 4k7
+4V5_PROG
RP25 470k 1%
VSET03A4V5
RP45 11k 1%
PSET03A4V5
L205 SRP7030-6R8FM
6u8
LX03A
VOUTF03A
L215
BLM18KG260TN1D
VOUT
C3105 22u 6.3V
C3115 22u 6.3V
88PH845
1
2
3
4
5
6
7
8
9
10
11
12
13
14
15
16
17
18
GND

Author: Zbyněk Kos & Tomáš Rykl
Engineer: Zbyněk Kos & Tomáš Rykl
Drawn by: Zbyněk Kos
Checked by: Tomáš Rykl
Approved by: *
http://www.nic.cz

Title: Turris Omnia - Power - 3A Regulator
Document Number: CZ11NIC230000-19
Revision: 230000
Sheet 19 of 26
Date: * *
Name: Turris_Lite_PWR_03A_4V5.SchDoc

CZ.NIC, z.s.p.o.
Milešovská 5
130 00 Praha 3

+3V3AO

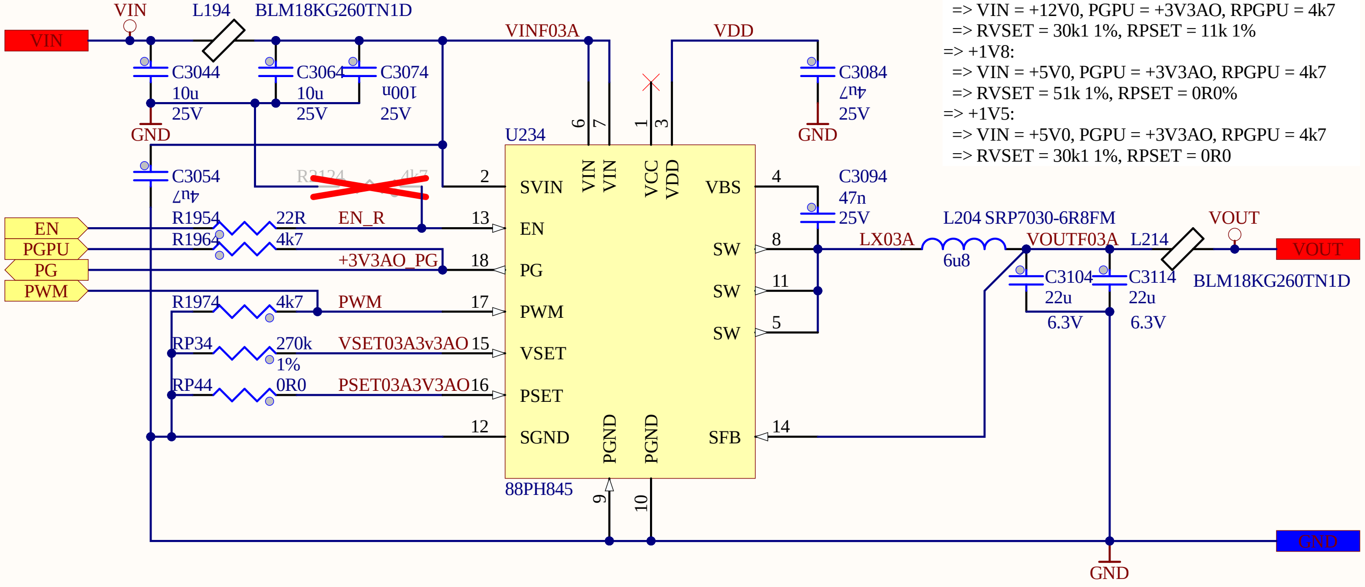
VIN
L194
BLM18KG260TN1D
VIN
C3044
10u
25V
GND
C3064
10u
25V
C3074
100n
25V
VINF03A
VDD
C3084
4u7
25V
GND
U234
6
7
1
3
C3054
4u7
R2124
4k7
2
SVIN
VIN
VIN
VCC
VDD
VBS
4
C3094
47n
25V
EN
R1954
22R
EN_R
13
EN
PGPU
R1964
4k7
PG
+3V3AO_PG
18
PG
PWM
R1974
4k7
PWM
17
PWM
SW
8
SW
11
SW
5
LX03A
L204 SRP7030-6R8FM
6u8
VOUTF03A
L214
VOUT
VOUT
BLM18KG260TN1D
C3104
22u
6.3V
C3114
22u
6.3V
RP34
270k
1%
VSET03A3v3AO
15
VSET
RP44
0R0
PSET03A3V3AO
16
PSET
12
SGND
PGND
PGND
SFB
14
88PH845
9
10
GND
GND

Power 03A:
=> +4V5:
  => VIN = +12V, PGPU = +3V3AO, RPGPU = 4k7
  => RVSET = 470k 1%, RPSET = 11k 1%
=> +3V3AO:
  => VIN = +12V0, PGPU = +12V0, RPGPU = 4k7
  => RVSET = 270k 1%, RPSET = 0R0
  => EN_PD = NA
=> +1V35AO:
  => VIN = +12V0, PGPU = +3V3AO, RPGPU = 4k7
  => RVSET = 30k1 1%, RPSET = 11k 1%
=> +1V8:
  => VIN = +5V0, PGPU = +3V3AO, RPGPU = 4k7
  => RVSET = 51k 1%, RPSET = 0R0%
=> +1V5:
  => VIN = +5V0, PGPU = +3V3AO, RPGPU = 4k7
  => RVSET = 30k1 1%, RPSET = 0R0

Author:	Zbyněk Kos & Tomáš Rykl
Engineer:	Zbyněk Kos & Tomáš Rykl
Drawn by:	Zbyněk Kos
Checked by:	Tomáš Rykl
Approved by:	*

http://www.nic.cz

Title:
Turris Omnia - Power - 3A Regulator

Document Number: CZ11NIC230000-20
Revision: 230000
Sheet 20 of 26
Date: * *
Name: Turris_Lite_PWR_03A_3V3AO.SchDoc

CZ.NIC, z.s.p.o.
Milešovská 5
130 00 Praha 3

+1V8

Power 03A:
=> +4V5:
  => VIN = +12V, PGPU = +3V3AO, RPGPU = 4k7
  => RVSET = 470k 1%, RPSET = 11k 1%
=> +3V3AO:
  => VIN = +12V0, PGPU = +12V0, RPGPU = 4k7
  => RVSET = 270k 1%, RPSET = 0R0
  => EN_PD = NA
=> +1V35AO:
  => VIN = +12V0, PGPU = +3V3AO, RPGPU = 4k7
  => RVSET = 30k1 1%, RPSET = 11k 1%
=> +1V8:
  => VIN = +5V0, PGPU = +3V3AO, RPGPU = 4k7
  => RVSET = 51k 1%, RPSET = 0R0%
=> +1V5:
  => VIN = +5V0, PGPU = +3V3AO, RPGPU = 4k7
  => RVSET = 30k1 1%, RPSET = 0R0

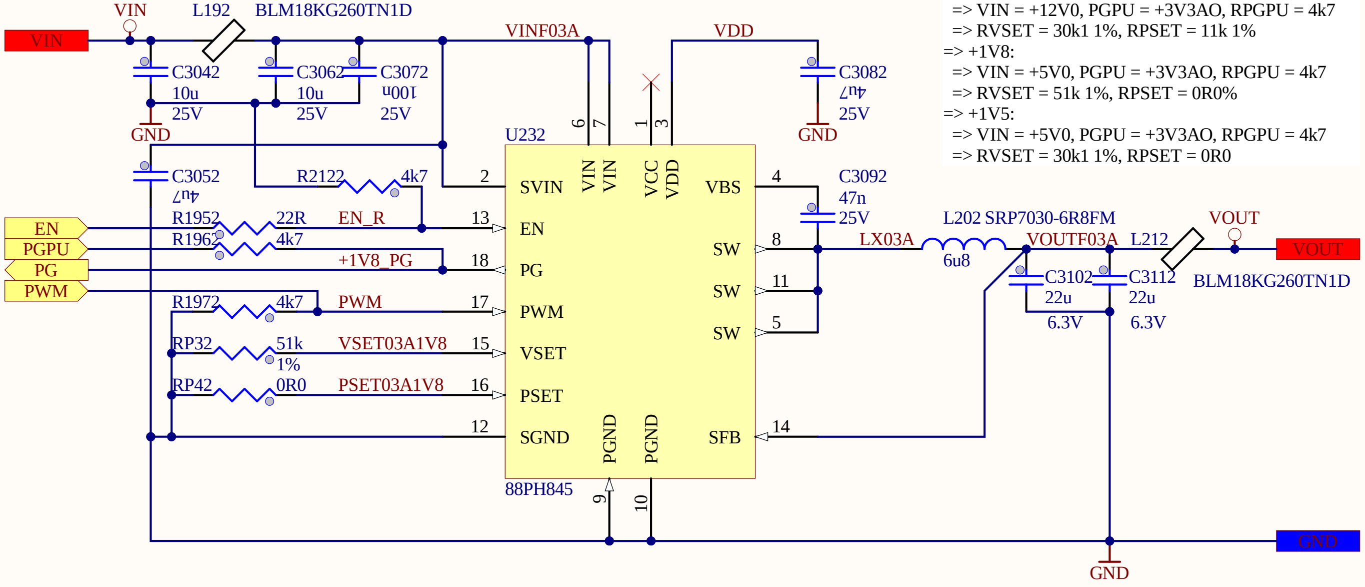
VIN
VIN
L192
BLM18KG260TN1D
VINF03A
VDD
C3042
10u
25V
C3062
10u
25V
C3072
100n
25V
C3082
4u7
25V
GND
GND
U232
C3052
4u7
R2122
4k7
EN
PGPU
PG
PWM
R1952
22R
EN_R
R1962
4k7
+1V8_PG
R1972
4k7
PWM
RP32
51k
1%
VSET03A1V8
RP42
0R0
PSET03A1V8
2
13
18
17
15
16
12
6
7
1
3
SVIN
EN
PG
PWM
VSET
PSET
SGND
VIN
VIN
VCC
VDD
VBS
SW
SW
SW
SFB
PGND
PGND
4
8
11
5
14
9
10
88PH845
C3092
47n
25V
LX03A
L202 SRP7030-6R8FM
6u8
VOUTF03A
L212
BLM18KG260TN1D
VOUT
VOUT
C3102
22u
6.3V
C3112
22u
6.3V
GND
GND

Author:	Zbyněk Kos & Tomáš Rykl
Engineer:	Zbyněk Kos & Tomáš Rykl
Drawn by:	Zbyněk Kos
Checked by:	Tomáš Rykl
Approved by:	*

http://www.nic.cz

Title: Turris Omnia - Power - 3A Regulator

Document Number: CZ11NIC230000-21
Revision: 230000
Sheet 21 of 26
Date: * *
Name: Turris_Lite_PWR_03A_1V8.SchDoc

CZ.NIC, z.s.p.o.
Milešovská 5
130 00 Praha 3

+1V5

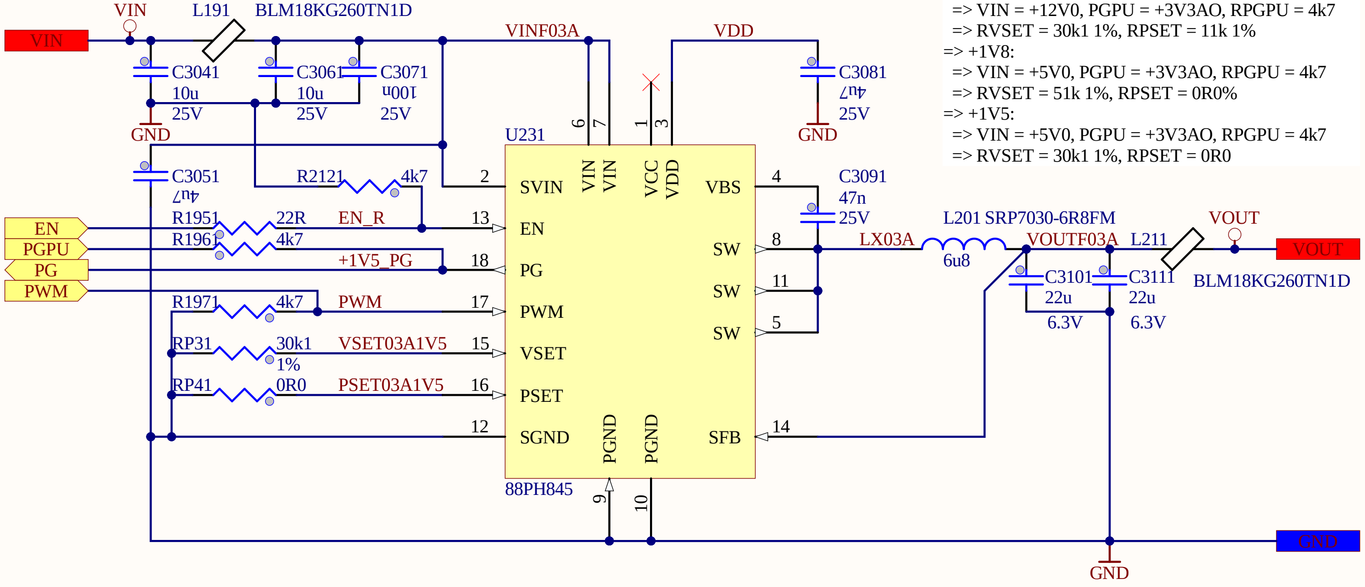
VIN
VIN
L191
BLM18KG260TN1D
VINF03A
VDD
C3041
10u
25V
C3061
10u
25V
C3071
100n
25V
C3081
4u7
25V
GND
GND
U231
C3051
4u7
R2121
4k7
2
SVIN
VIN
VIN
VCC
VDD
6
7
1
3
VBS
4
C3091
47n
25V
EN
PGPU
PG
PWM
R1951
22R
EN_R
13
EN
R1961
4k7
+1V5_PG
18
PG
R1971
4k7
PWM
17
PWM
RP31
30k1
1%
VSETO3A1V5
15
VSET
RP41
0R0
PSET03A1V5
16
PSET
12
SGND
PGND
PGND
SFB
14
SW
8
SW
11
SW
5
L201 SRP7030-6R8FM
LX03A
6u8
VOUTF03A
L211
VOUT
VOUT
BLM18KG260TN1D
C3101
22u
6.3V
C3111
22u
6.3V
88PH845
9
10
GND
GND

Power 03A:
=> +4V5:
  => VIN = +12V, PGPU = +3V3AO, RPGPU = 4k7
  => RVSET = 470k 1%, RPSET = 11k 1%
=> +3V3AO:
  => VIN = +12V0, PGPU = +12V0, RPGPU = 4k7
  => RVSET = 270k 1%, RPSET = 0R0
  => EN_PD = NA
=> +1V35AO:
  => VIN = +12V0, PGPU = +3V3AO, RPGPU = 4k7
  => RVSET = 30k1 1%, RPSET = 11k 1%
=> +1V8:
  => VIN = +5V0, PGPU = +3V3AO, RPGPU = 4k7
  => RVSET = 51k 1%, RPSET = 0R0%
=> +1V5:
  => VIN = +5V0, PGPU = +3V3AO, RPGPU = 4k7
  => RVSET = 30k1 1%, RPSET = 0R0

Author: Zbyněk Kos & Tomáš Rykl
Engineer: Zbyněk Kos & Tomáš Rykl
Drawn by: Zbyněk Kos
Checked by: Tomáš Rykl
Approved by: *
http://www.nic.cz

Title: Turris Omnia - Power - 3A Regulator
Document Number: CZ11NIC230000-22
Revision: 230000
Sheet 22 of 26
Date: * *
Name: Turris_Lite_PWR_03A_1V5.SchDoc

CZ.NIC, z.s.p.o.
Milešovská 5
130 00 Praha 3

+1V35AO

Power 03A:
=> +4V5:
  => VIN = +12V, PGPU = +3V3AO, RPGPU = 4k7
  => RVSET = 470k 1%, RPSET = 11k 1%
=> +3V3AO:
  => VIN = +12V0, PGPU = +12V0, RPGPU = 4k7
  => RVSET = 270k 1%, RPSET = 0R0
  => EN_PD = NA
=> +1V35AO:
  => VIN = +12V0, PGPU = +3V3AO, RPGPU = 4k7
  => RVSET = 30k1 1%, RPSET = 11k 1%
=> +1V8:
  => VIN = +5V0, PGPU = +3V3AO, RPGPU = 4k7
  => RVSET = 51k 1%, RPSET = 0R0%
=> +1V5:
  => VIN = +5V0, PGPU = +3V3AO, RPGPU = 4k7
  => RVSET = 30k1 1%, RPSET = 0R0

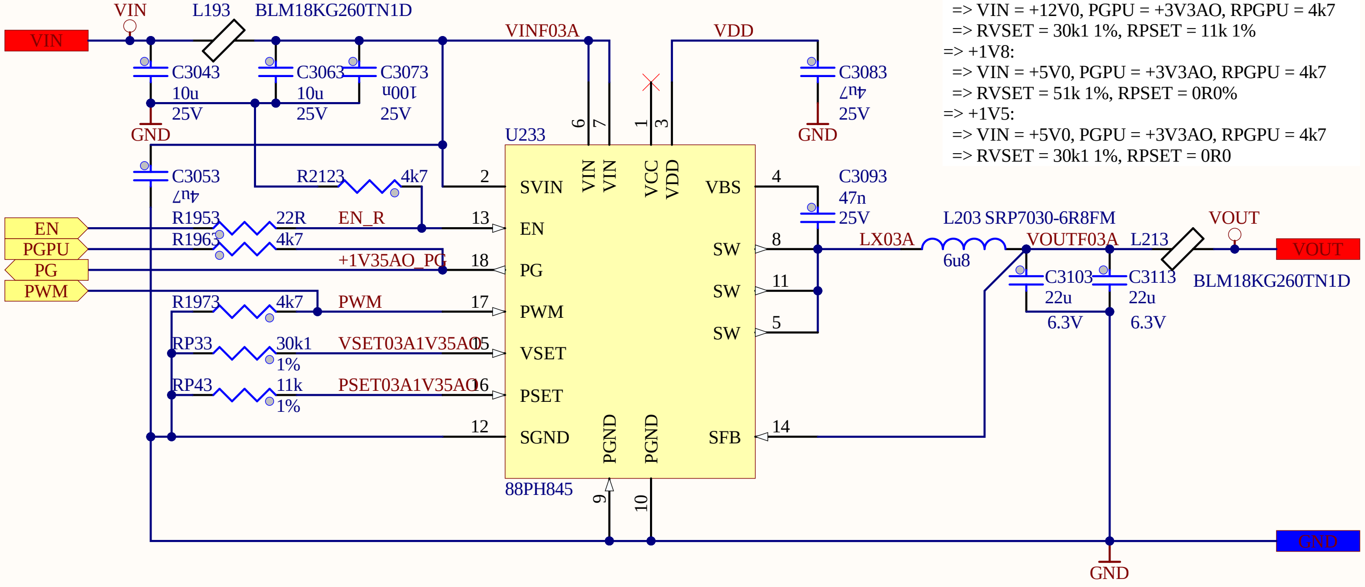
VIN
VIN
L193
BLM18KG260TN1D
VINF03A
VDD
C3043
10u
25V
C3063
10u
25V
C3073
100n
25V
C3083
4u7
25V
GND
GND
U233
6
7
1
3
C3053
4u7
R2123
4k7
2
EN
PGPU
PG
PWM
R1953
22R
EN_R
13
R1963
4k7
+1V35AO_PG
18
R1973
4k7
PWM
17
RP33
30k1
1%
VSET03A1V35AO
15
RP43
11k
1%
PSET03A1V35AO
16
12
SVIN
EN
PG
PWM
VSET
PSET
SGND
VIN
VIN
VCC
VDD
PGND
PGND
VBS
SW
SW
SW
SFB
88PH845
9
10
4
8
11
5
14
C3093
47n
25V
L203 SRP7030-6R8FM
LX03A
6u8
VOUTF03A
L213
VOUT
VOUT
BLM18KG260TN1D
C3103
22u
6.3V
C3113
22u
6.3V
GND
GND

Author: Zbyněk Kos & Tomáš Rykl
Engineer: Zbyněk Kos & Tomáš Rykl
Drawn by: Zbyněk Kos
Checked by: Tomáš Rykl
Approved by: *
http://www.nic.cz

Title: Turris Omnia - Power - 3A Regulator
Document Number: CZ11NIC230000-23
Revision: 230000
Sheet 23 of 26
Date: * *
Name: Turris_Lite_PWR_03A_1V35AO.SchDoc

CZ.NIC, z.s.p.o.
Milešovská 5
130 00 Praha 3

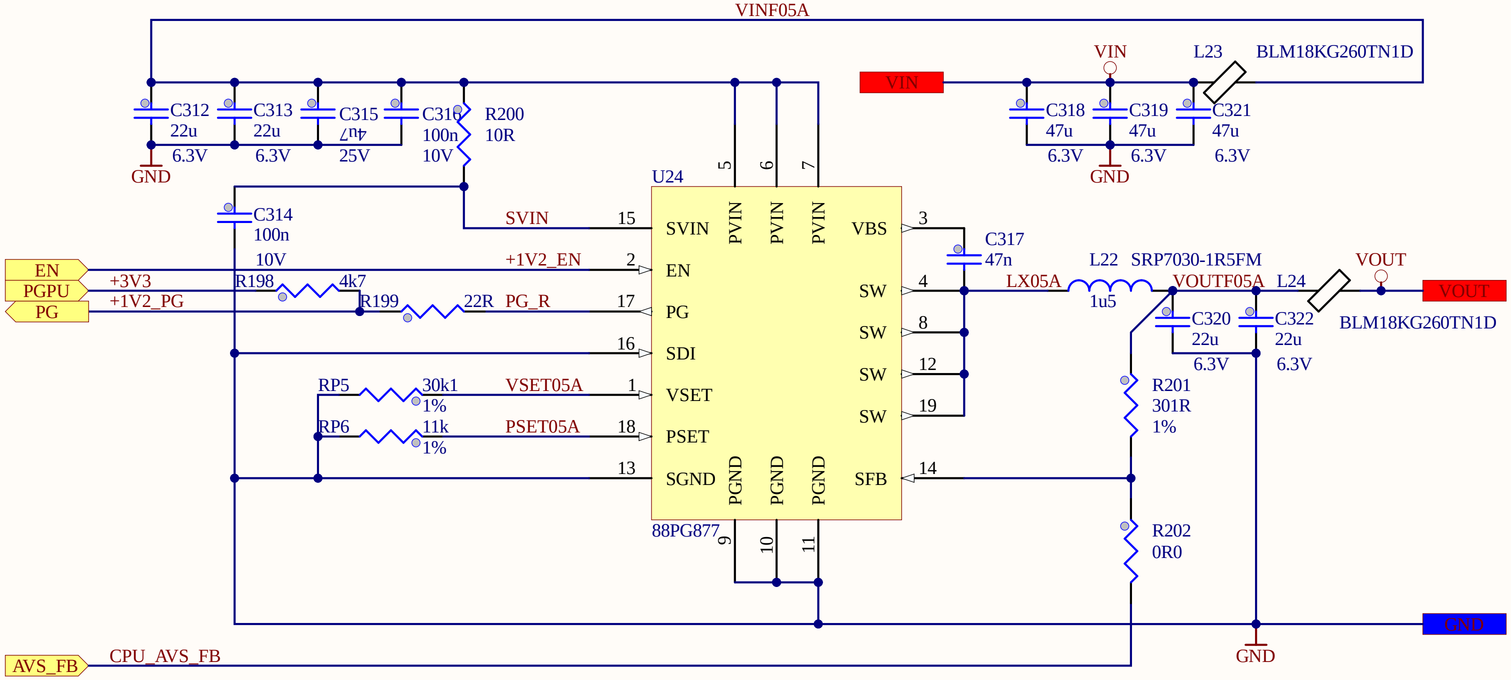
VINF05A
C312
22u
6.3V
C313
22u
6.3V
C315
4u7
25V
C316
100n
10V
R200
10R
GND
VIN
VIN
L23
BLM18KG260TN1D
C318
47u
6.3V
C319
47u
6.3V
C321
47u
6.3V
GND
U24
5
6
7
PVIN
PVIN
PVIN
C314
100n
10V
SVIN
15
SVIN
VBS
3
C317
47n
EN
PGPU
PG
+3V3
+1V2_PG
R198
4k7
R199
22R
PG_R
+1V2_EN
2
EN
17
PG
16
SDI
SW
4
SW
8
SW
12
SW
19
LX05A
L22
SRP7030-1R5FM
1u5
VOUTF05A
L24
VOUT
VOUT
BLM18KG260TN1D
C320
22u
6.3V
C322
22u
6.3V
RP5
30k1
1%
VSET05A
1
VSET
RP6
11k
1%
PSET05A
18
PSET
13
SGND
PGND
PGND
PGND
SFB
14
R201
301R
1%
R202
0R0
88PG877
9
10
11
GND
GND
AVS_FB
CPU_AVS_FB

Author:	Zbyněk Kos & Tomáš Rykl	Title: Turris Omnia - Power - 5A Regulator	CZ.NIC, z.s.p.o. Milešovská 5 130 00 Praha 3
Engineer:	Zbyněk Kos & Tomáš Rykl		
Drawn by:	Zbyněk Kos		
Checked by:	Tomáš Rykl	Document Number: CZ11NIC230000-24	Revision: 230000
Approved by:	*	Sheet 24 of 26	Date: * *
http://www.nic.cz		Name: Turris_Lite_PWR_05A.SchDoc	

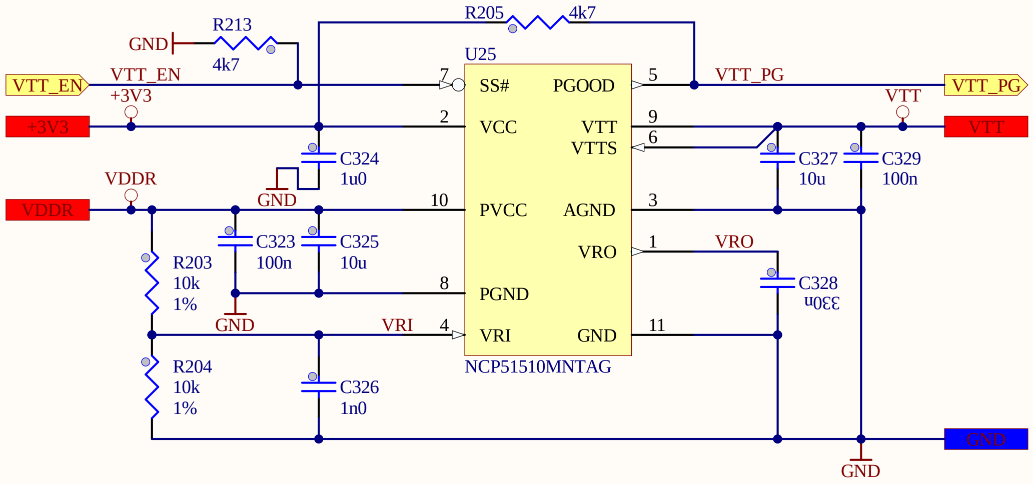
R205
4k7
U25
R213
GND
4k7
VTT_EN
VTT_EN
+3V3
+3V3
7
SS#
PGOOD
5
VTT_PG
VTT_PG
VTT
2
VCC
VTT
9
VTT
VTTS
6
C324
1u0
C327
10u
C329
100n
VDDR
GND
VDDR
10
PVCC
AGND
3
C323
100n
C325
10u
VRO
1
VRO
R203
10k
1%
C328
330n
8
PGND
GND
VRI
4
VRI
GND
11
NCP51510MNTAG
R204
10k
1%
C326
1n0
GND
GND

Author: Zbyněk Kos & Tomáš Rykl
Engineer: Zbyněk Kos & Tomáš Rykl
Drawn by: Zbyněk Kos
Checked by: Tomáš Rykl
Approved by: *
http://www.nic.cz

Title: Turris Omnia - Power - VTT Regulator
Document Number: CZ11NIC230000-25
Revision: 230000
Sheet 25 of 26
Date: * *
Name: Turris_Lite_PWR_VTT.SchDoc

CZ.NIC, z.s.p.o.
Milešovská 5
130 00 Praha 3

Mechanical components
- mounting holes
- screws
- box elements
- distribution box
- distribution box content (manual etc.)
- fiducial marks???
- etc.

Connect all mount holes to EARTH

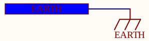
EARTH
EARTH

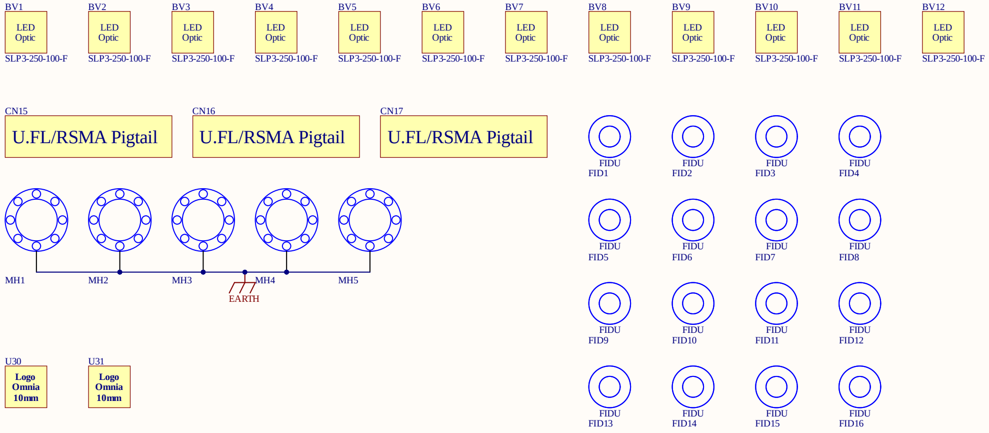
BV1
LED Optic
SLP3-250-100-F
BV2
LED Optic
SLP3-250-100-F
BV3
LED Optic
SLP3-250-100-F
BV4
LED Optic
SLP3-250-100-F
BV5
LED Optic
SLP3-250-100-F
BV6
LED Optic
SLP3-250-100-F
BV7
LED Optic
SLP3-250-100-F
BV8
LED Optic
SLP3-250-100-F
BV9
LED Optic
SLP3-250-100-F
BV10
LED Optic
SLP3-250-100-F
BV11
LED Optic
SLP3-250-100-F
BV12
LED Optic
SLP3-250-100-F
CN15
U.FL/RSMA Pigtail
CN16
U.FL/RSMA Pigtail
CN17
U.FL/RSMA Pigtail
MH1
MH2
MH3
MH4
MH5
EARTH
U30
Logo Omnia 10mm
U31
Logo Omnia 10mm
FIDU FID1
FIDU FID2
FIDU FID3
FIDU FID4
FIDU FID5
FIDU FID6
FIDU FID7
FIDU FID8
FIDU FID9
FIDU FID10
FIDU FID11
FIDU FID12
FIDU FID13
FIDU FID14
FIDU FID15
FIDU FID16

Screws

Heatsinks

Thermal tapes

Thermal polymers

AL Box parts

Battery

Antennas

Paper Box

Manual

Power Supply

ETH cables - optional

WiFi cards - optional

Diplexers - optional

SFP module - optional

Jumper

Author: Zbyněk Kos & Tomáš Rykl
Engineer: Zbyněk Kos & Tomáš Rykl
Drawn by: Zbyněk Kos
Checked by: Tomáš Rykl
Approved by: *
http://www.nic.cz

Title: Turris Omnia - Mech. & SW & Accs
Document Number: CZ11NIC230000-26
Revision: 230000
Sheet 26 of 26
Date: * *
Name: Turris_Lite_MECH.SchDoc

CZ.NIC, z.s.p.o.
Milešovská 5
130 00 Praha 3