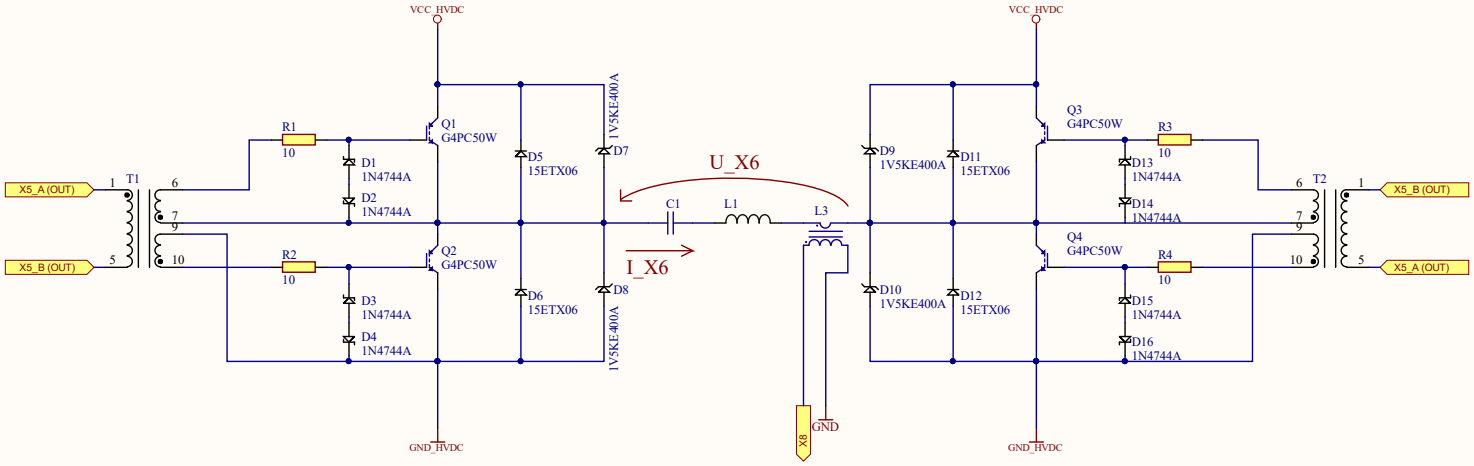

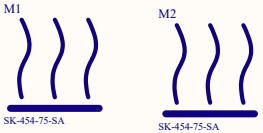

Title: TK531 Utgangstrinn		
Size: A3	Revision: 2	Author: Øystein Smith
Date: 19.06.2017	Sheet 18 of 20	Omega Verksted
File: C:\git\tesla-driver\01_Documentation\Forenklet skjema\TK531_Utgangstrinn.SchDoc		