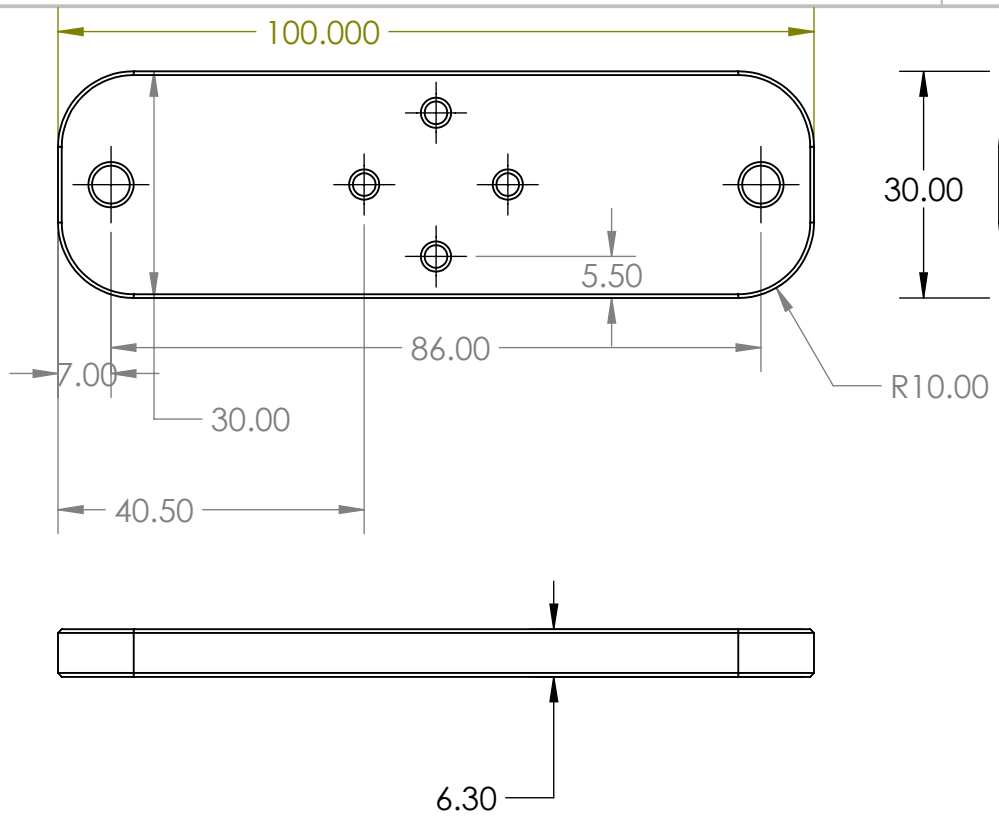

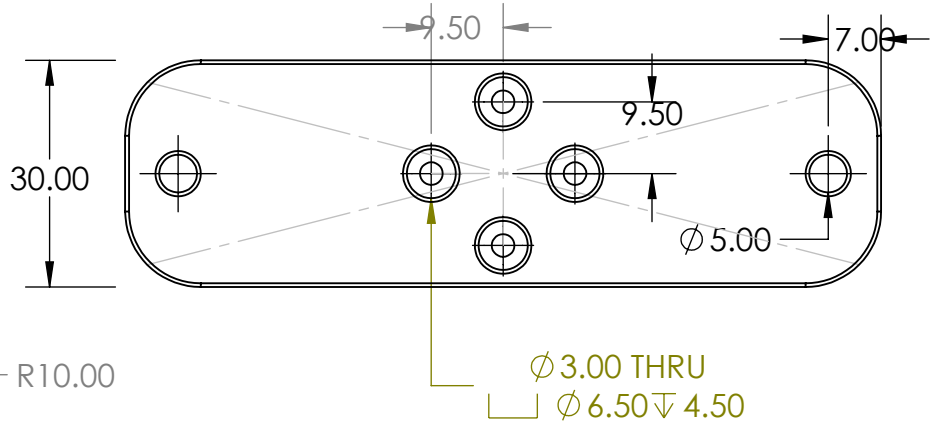

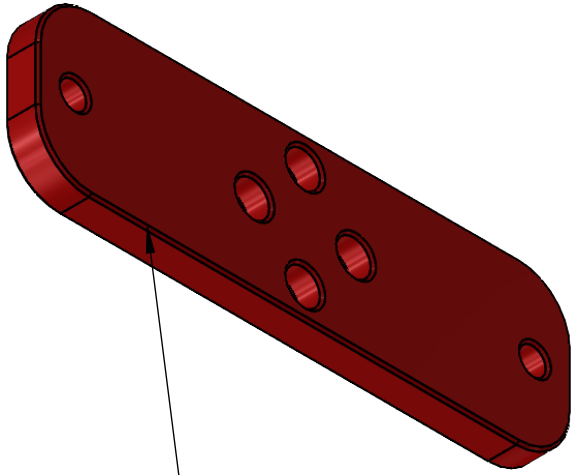

0.5mm chanfers on all exposed edges

		UNLESS OTHERWISE SPECIFIED:		NAME	DATE
		DIMENSIONS ARE IN MM TOLERANCES: ±0.12mm	DRAWN	saac Wax	1/20/2022
			CHECKED		
			ENG APPR.		
			MFG APPR.		
			Q.A.		
		MATERIAL: 6061 AL	COMMENTS: Please let me know if there is anything missing on this.		
NEXT ASSY	USED ON	FINISH: 6.2 µm			
APPLICATION		DO NOT SCALE DRAWING			

TITLE:

AL, T200 MOUNT

SIZE	DWG. NO.	REV
A	ROV-300-26	
SCALE: 1:1	WEIGHT:	SHEET 1 OF 1

PROPRIETARY AND CONFIDENTIAL

THE INFORMATION CONTAINED IN THIS DRAWING IS THE SOLE PROPERTY OF Cablio Robutcus Club. ANY REPRODUCTION IN PART OR AS A WHOLE WITHOUT THE WRITTEN PERMISSION OF <INSERT COMPANY NAME HERE> IS PROHIBITED.

SOLIDWORKS Educational Product. For Instructional Use Only.