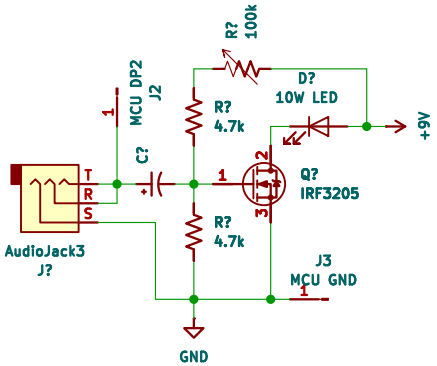

This schematic depicts a "demo" board with a 10W LED and 9V power supply

Sheet: /
File: VOLK_enhanced_transmitter.kicad_sch

Title: VOLF Enhanced Transmitter

Size: A5	Date: 2024-09-26	Rev: 1.0
KiCad E.D.A. 8.0.5		Id: 1/1