iMCP HT32SX - EVALUATION BOARD SCHEMATICS

ST-LINK

POWER SUPPLY

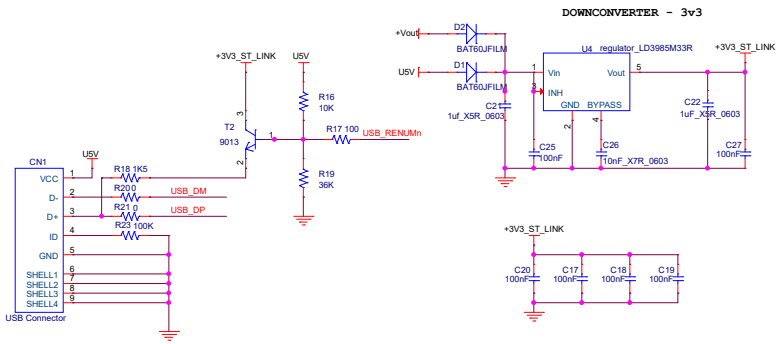

MCU

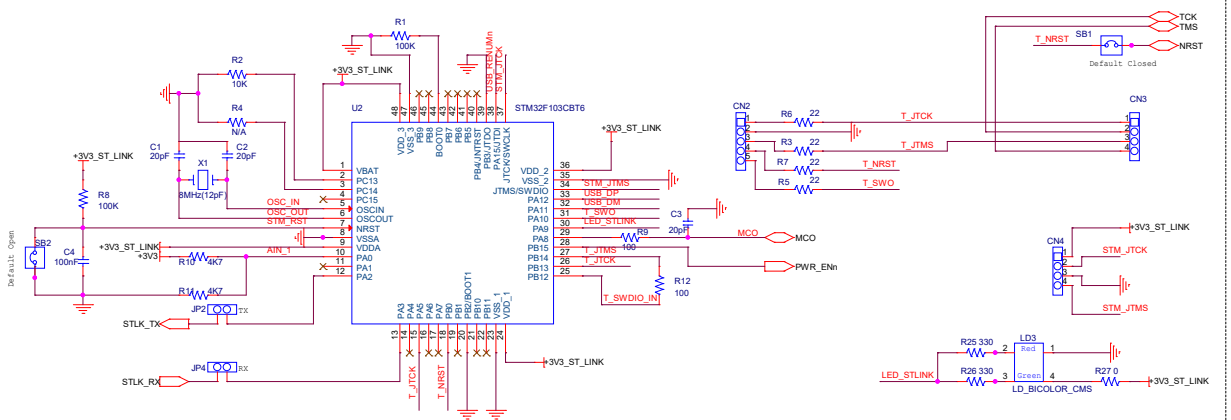

iMCP HT32SX

POWER SUPPLY

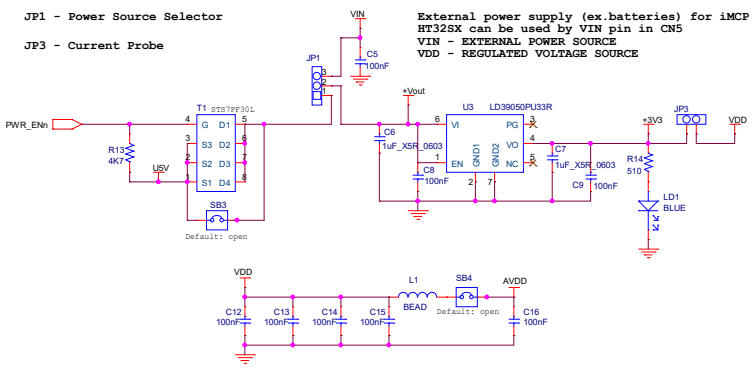

CONNECTORS

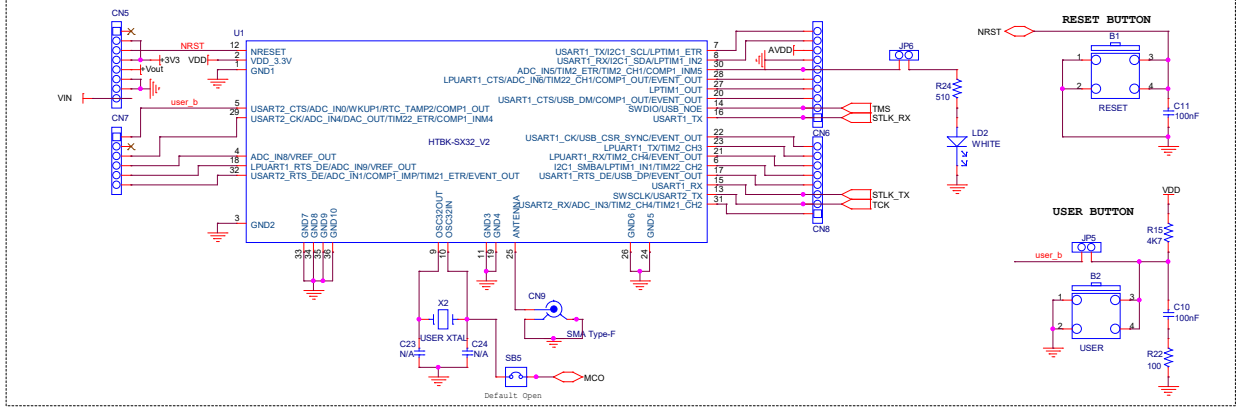

Title	ICMP Evaluation Board Schematics	
Size A2	Document Number PED-DES-SCH-EVB-0001	Rev 2.1
Date: Thursday, December 12, 2019	Sheet 1 of 1	