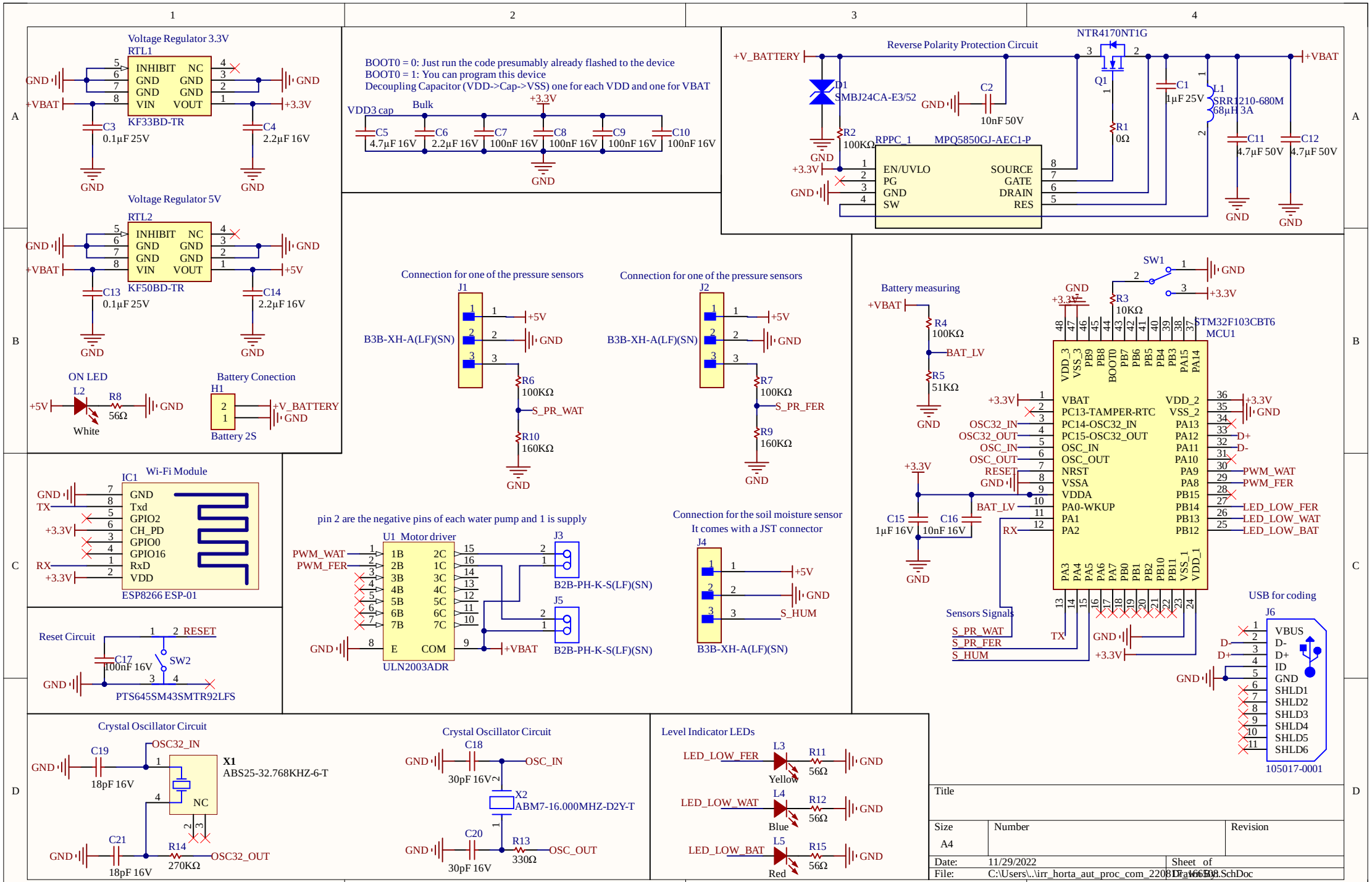
Voltage Regulator 3.3V
RTL1
INHIBIT NC
GND GND
GND GND
VIN VOUT
KF33BD-TR
C3 0.1µF 25V
C4 2.2µF 16V
Voltage Regulator 5V
RTL2
KF50BD-TR
C13 0.1µF 25V
C14 2.2µF 16V
ON LED
L2
R8 56Ω
White
Battery Conection
H1
Battery 2S
BOOT0 = 0: Just run the code presumably already flashed to the device
BOOT0 = 1: You can program this device
Decoupling Capacitor (VDD->Cap->VSS) one for each VDD and one for VBAT
VDD3 cap
Bulk
C5 4.7µF 16V
C6 2.2µF 16V
C7 100nF 16V
C8 100nF 16V
C9 100nF 16V
C10 100nF 16V
Reverse Polarity Protection Circuit
NTR4170NT1G
Q1
D1 SMBJ24CA-E3/52
C2 10nF 50V
R2 100KΩ
R1 0Ω
C1 1µF 25V
L1 SRR1210-680M 68µH 3A
C11 4.7µF 50V
C12 4.7µF 50V
RPPC_1
MPQ5850GJ-AEC1-P
EN/UVLO
PG
GND
SW
SOURCE
GATE
DRAIN
RES
Connection for one of the pressure sensors
J1
B3B-XH-A(LF)(SN)
R6 100KΩ
S_PR_WAT
R10 160KΩ
Connection for one of the pressure sensors
J2
R7 100KΩ
S_PR_FER
R9 160KΩ
Battery measuring
R4 100KΩ
BAT_LV
R5 51KΩ
SW1
R3 10KΩ
STM32F103CBT6
MCU1
VBAT
PC13-TAMPER-RTC
PC14-OSC32_IN
PC15-OSC32_OUT
OSC_IN
OSC_OUT
NRST
VSSA
VDDA
PA0-WKUP
PA1
PA2
VDD_2
VSS_2
PA13
PA12
PA11
PA10
PA9
PA8
PB15
PB14
PB13
PB12
C15 1µF 16V
C16 10nF 16V
Sensors Signals
S_PR_WAT
S_PR_FER
S_HUM
USB for coding
J6
VBUS
D-
D+
ID
GND
SHLD1
SHLD2
SHLD3
SHLD4
SHLD5
SHLD6
105017-0001
Wi-Fi Module
IC1
GND
Txd
GPIO2
CH_PD
GPIO0
GPIO16
RxD
VDD
ESP8266 ESP-01
Reset Circuit
RESET
C17 100nF 16V
SW2
PTS645SM43SMTR92LFS
pin 2 are the negative pins of each water pump and 1 is supply
U1 Motor driver
PWM_WAT
PWM_FER
1B 2C
2B 1C
3B 3C
4B 4C
5B 5C
6B 6C
7B 7C
E COM
ULN2003ADR
J3
B2B-PH-K-S(LF)(SN)
J5
Connection for the soil moisture sensor
It comes with a JST connector
J4
S_HUM
Crystal Oscillator Circuit
C19 18pF 16V
OSC32_IN
X1
ABS25-32.768KHZ-6-T
NC
C21 18pF 16V
R14 270KΩ
OSC32_OUT
Crystal Oscillator Circuit
C18 30pF 16V
OSC_IN
X2
ABM7-16.000MHZ-D2Y-T
C20 30pF 16V
R13 330Ω
OSC_OUT
Level Indicator LEDs
LED_LOW_FER
L3 Yellow
R11 56Ω
LED_LOW_WAT
L4 Blue
R12 56Ω
LED_LOW_BAT
L5 Red
R15 56Ω
Title
Size A4
Number
Revision
Date: 11/29/2022
Sheet of
File: C:\Users\..\irr_horta_aut_proc_com_2208\irr_horta_aut_proc_com_2208.SchDoc
Drawn by: