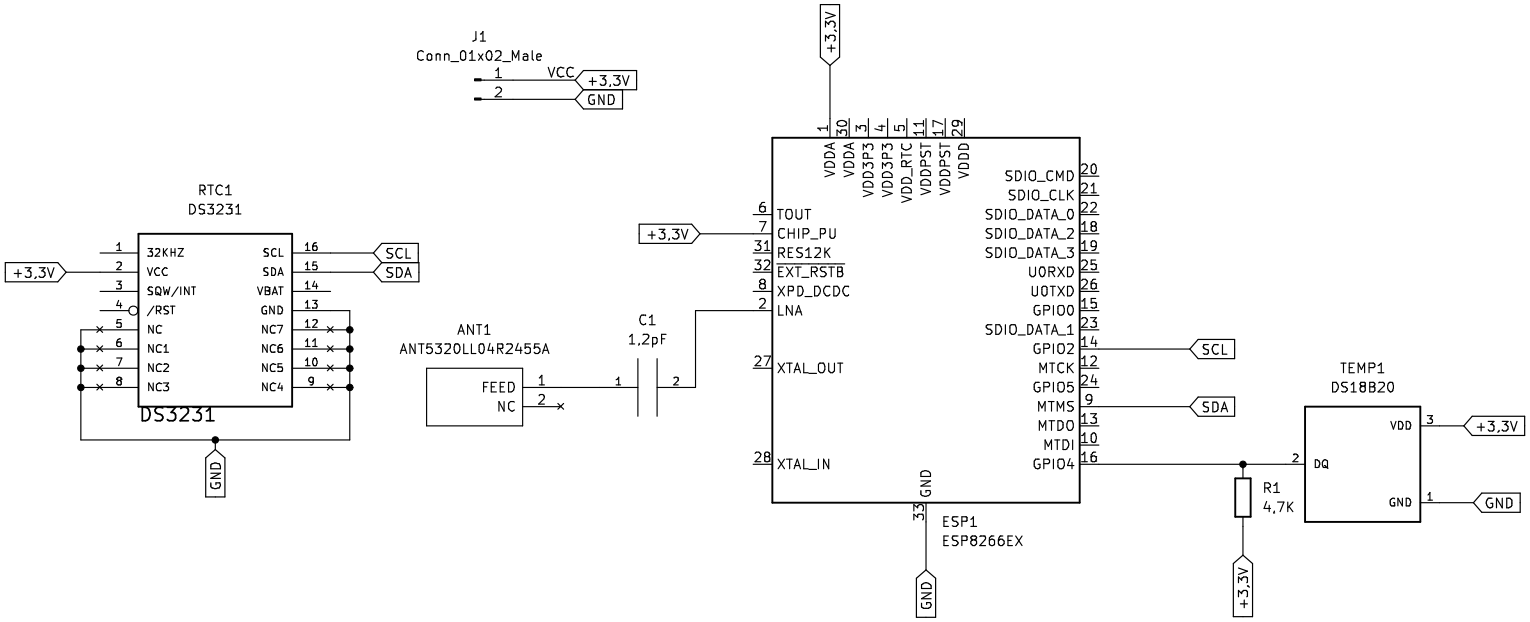
J1
Conn_01x02_Male
VCC
+3,3V
GND
RTC1
DS3231
32KHZ
VCC
SQW/INT
/RST
NC
NC1
NC2
NC3
SCL
SDA
VBAT
GND
NC7
NC6
NC5
NC4
DS3231
ANT1
ANT5320LL04R2455A
FEED
NC
C1
1,2pF
ESP1
ESP8266EX
VDDA
VDDA
VDD3P3
VDD3P3
VDD_RTC
VDDPST
VDDPST
VDDD
TOUT
CHIP_PU
RES12K
EXT_RSTB
XPD_DCDC
LNA
XTAL_OUT
XTAL_IN
SDIO_CMD
SDIO_CLK
SDIO_DATA_0
SDIO_DATA_2
SDIO_DATA_3
U0RXD
U0TXD
GPIO0
SDIO_DATA_1
GPIO2
MTCK
GPIO5
MTMS
MTDO
MTDI
GPIO4
R1
4,7K
TEMP1
DS18B20
VDD
DQ
GND