Front view and mounting

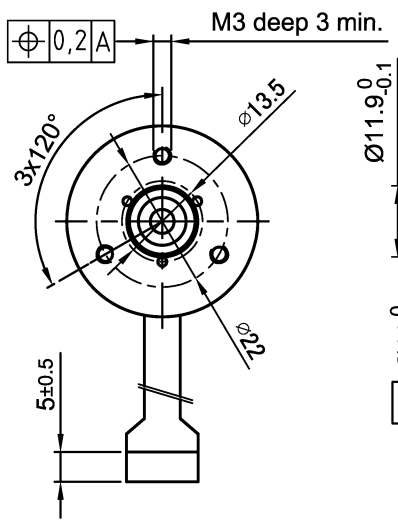

Side view

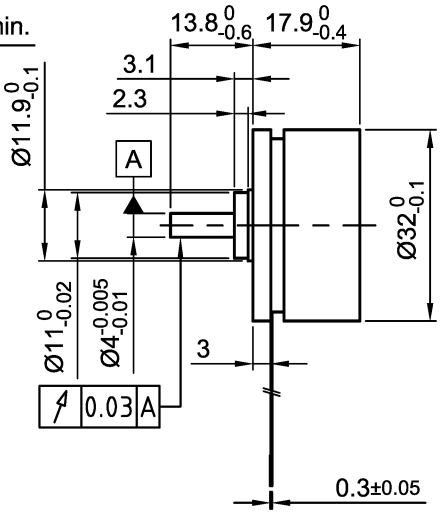

Rear view

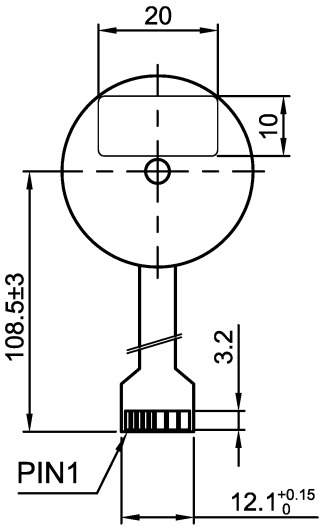

PFC pitch: 0,3mm

PFC CONNECTION:

PIN1–4.5–24V DC
PIN2–Hall senser3
PIN3–Hall senser1
PIN4–Hall senser2
PIN5–GND
PIN6–Motor phase W
PIN7–Motor phase V
PIN8–Motor phase U

HALL CONNECTION

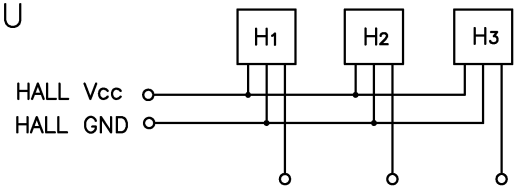

SPECIFICATION \ CONNECTION	STAR
NO. OF POL./PHASE	8/3
VOLTAGE RATED (VDC)	24
NO LOAD CURRENT (A)	<0.37
CURRENT RATED/PEAK (A)	0,5/ 1.5
RESISTANCE/PHASE TO PHASE (Ohms) @20°C	13,7 ±10%
INDUCTANCE/PHASE TO PHASE (mH) @1KHz	4.86 ±20% A
TORQUE RATED/PEAK (Nm) [lb-in]	0.0255/0.0765 [0,226/0,677]
TORQUE CONSTANT (Nm/A)/BACK-EMF (Vrms/kRPM)	0.051/ 3,65
POWER RATED (W)	7,4
SPEED RATED/NO LOAD (RPM)	2760/4530
ROTOR INERTIA (Kg-m²) [lb-in²]	3,5x10⁻⁶ [0.0618]
WEIGHT (Kg) [lb]	0.050

PERMISSIBLE RADIAL+AXIAL FORCE

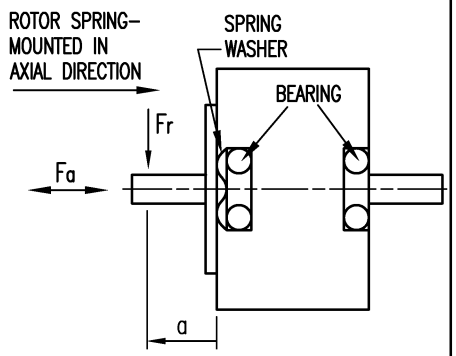

AXIAL-FORCE Fa (N)	Fa=4 max.	
DISTANCE a (mm)	5	
RADIAL-FORCE Fr (N)	14 max.	
	AXIAL	RADIAL
SHAFT PLAY (mm)	0.6	0.02
AT LOAD MAX: (N)	4	4

TEMPERATURE RISE: MAX.80°C
AMBIENT TEMPERATURE -20°~ 50°C
INSULATION RESISTANCE 100 MOhm (UNDER NORMAL TEMPERATURE AND HUMIDITY)
INSULATION CLASS B 130° [266°F]
DIELECTRIC STRENGTH 250VAC FOR 1 MIN. (BETWEEN THE MOTOR COILS AND THE MOTOR CASE)
AMBIENT HUMIDITY MAX. 85% (NO CONDENSATION)

CW from shaft side

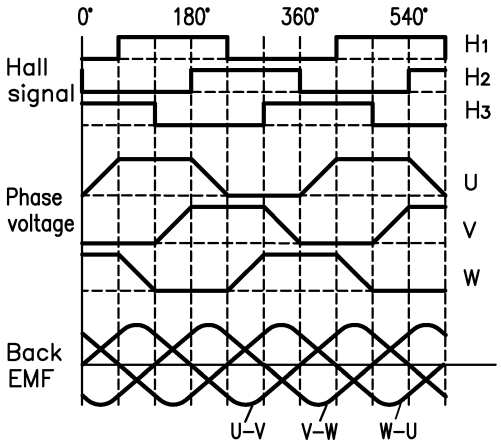

STAR CONNECTION

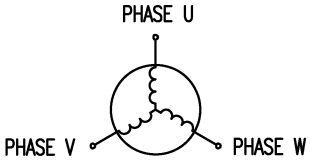

REV	DESCRIPTION	DATE	DRN
A	–	25.10.16	J.K.

Nanotec® PLUG & DRIVE

Surface specification DIN ISO 1302 | General tolerances DIN ISO 2768- cH | Work piece edge DIN ISO 13715

		SIGNATURE	DATE
APVD	S.R.		02.08.2016
CHKD			
DRN	J.K.		01.08.2016

BRUSHLESS DC MOTOR

DWG.NO DF32M024027-A