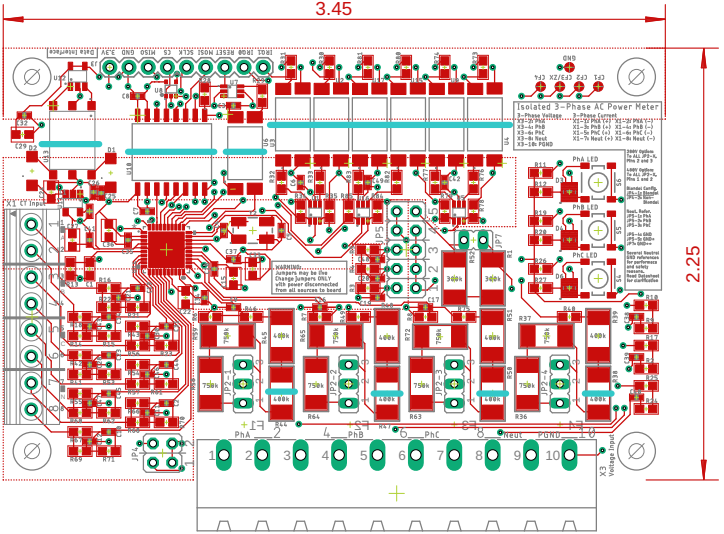


3/12/2019 4:18 PM C:\Users\Peter\Desktop\1.4Fv3\1.4Fv3.brd