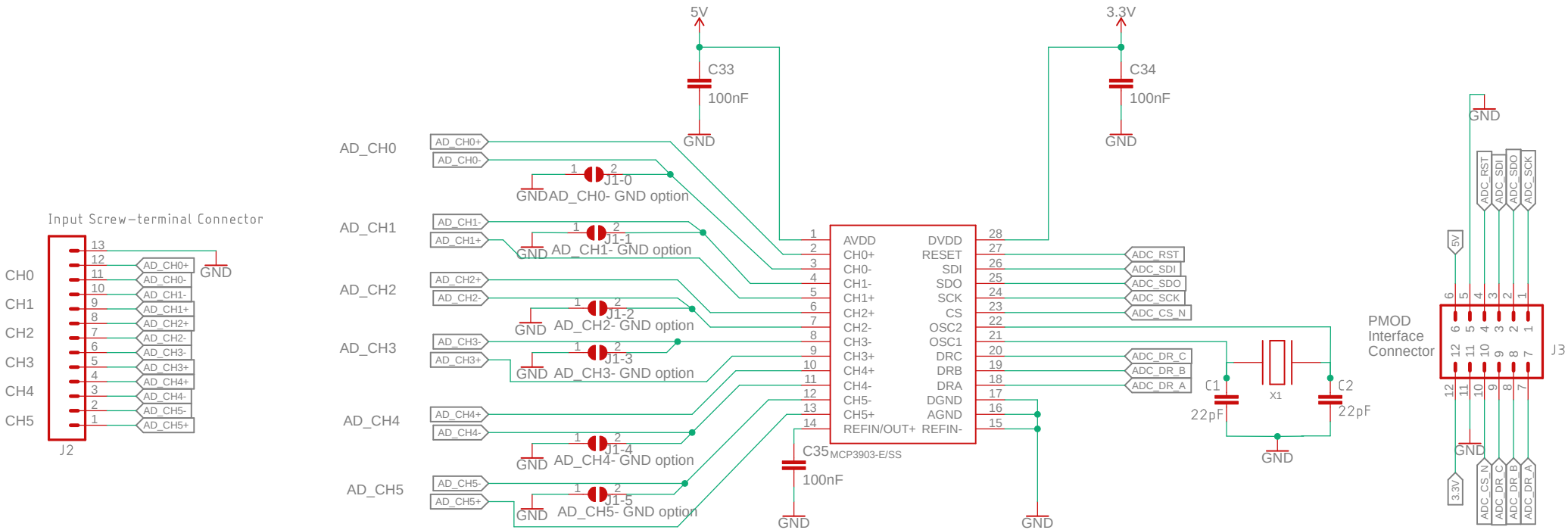


California Institute of Telecommunication and Information Technology (Calit 2)

University of California, Irvine version 1.0 (c) 2018

TITLE: Six Channel Delta Sigma A/D Converter (Microchip MCP3903 Chipset)

Team Members: Zhi Luo, Erica Deng , Lee , Dr.Michael Klopfer , Prof. G.P.Li

Date: 11/27/2018 | Sheet:1/1