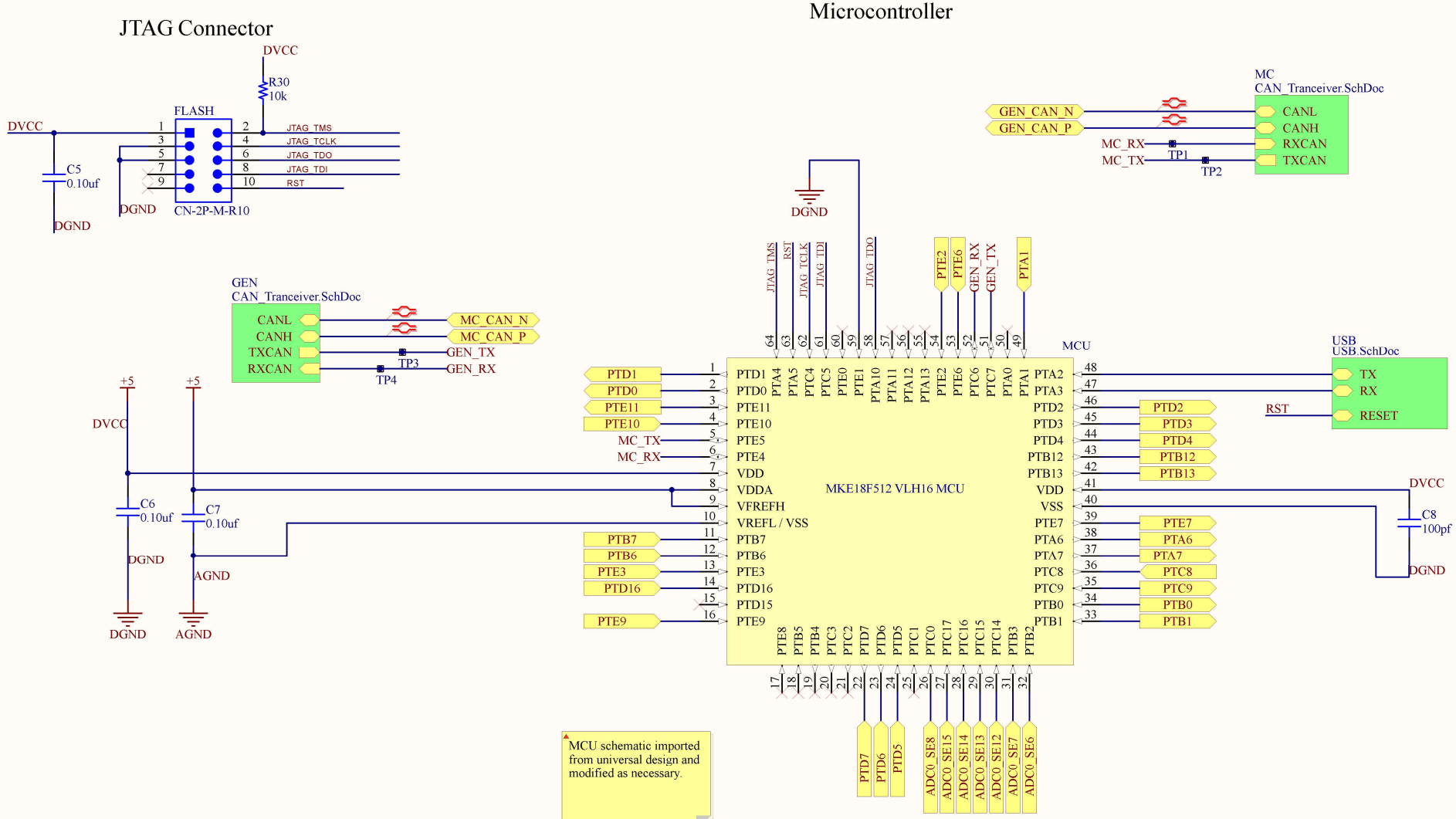

Title	Microcontroller	
Size: A4	Number: MCU2018-2	Revision: 2.0
Date: 4/26/2019	Sheet 2 of 4	
File: C:\Users\...\MCU_MKE185F512VLH16.SchDoc	Drawn By:	