PWR

File: PWR.kicad_sch

MCU

File: MCU.kicad_sch

MUX

File: MUX.kicad_sch

IO

File: IO.kicad_sch

Reconstructed from R4 gerber copper (copper_netlist_rhs.json). Netlist authority = copper, not the original PDF.

Reconstructed from R4 gerber copper (copper_netlist_rhs.json). Netlist authority = copper, not the orig

Calceus Health (copper-netlist reconstruction)

Sheet: /
File: Reid_Orthotic_v2_RHS.kicad_sch

Title: Reid Orthotic v2 R4 RHS - root

Size: A4	Date: 2026-10-01	**Rev: R4**
KiCad E.D.A. kicad-cli 7.0.11+dfsg-1build4		Id: 1/5

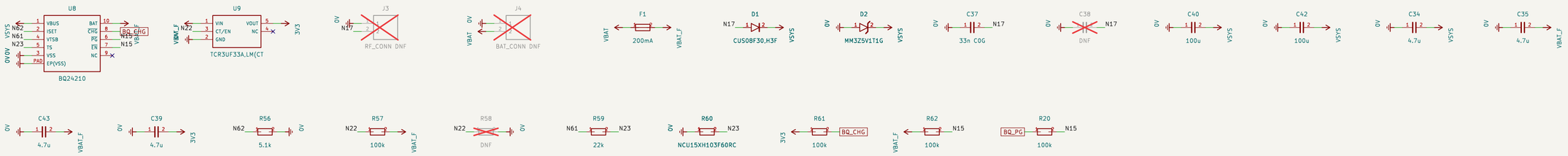

Calceus Health (copper-netlist reconstruction)

Sheet: /PWR/
File: PWR.kicad_sch

Title: Reid Orthotic v2 R4 RHS – PWR (copper reconstruction)

Size: A2	Date: 2026-10-01	**Rev: R4**
KiCad E.D.A. kicad-cli 7.0.11+dfsg-1build4		Id: 2/5

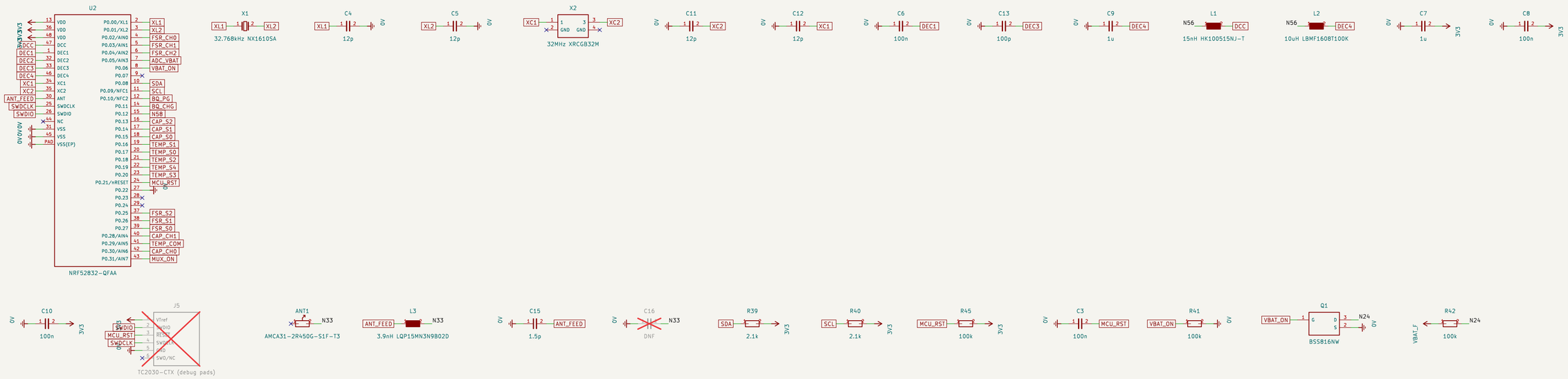

Calceus Health (copper-netlist reconstruction)

Sheet: /MCU/
File: MCU.kicad_sch

Title: Reid Orthotic v2 R4 RHS – MCU (copper reconstruction)

Size: A2	Date: 2026-10-01	**Rev: R4**
KiCad E.D.A. kicad-cli 7.0.11+dfsg-1build4		Id: 3/5

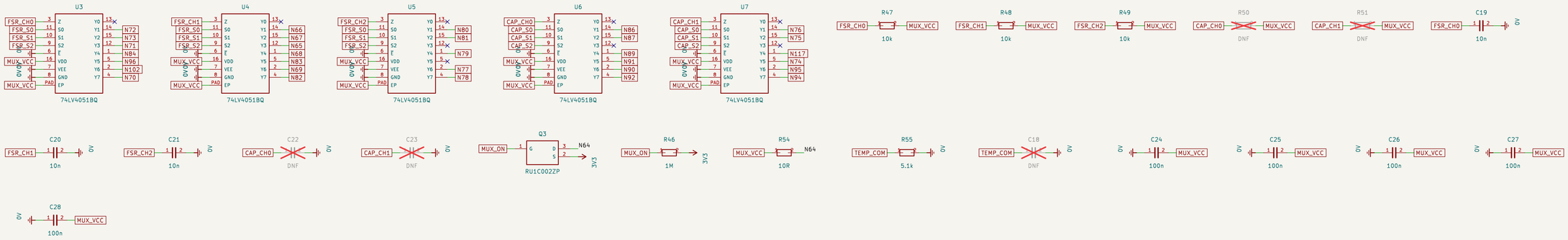

Calceus Health (copper-netlist reconstruction)

Sheet: /MUX/
File: MUX.kicad_sch

Title: Reid Orthotic v2 R4 RHS – MUX (copper reconstruction)

Size: A2	Date: 2026-10-01	**Rev: R4**
KiCad E.D.A. kicad-cli 7.0.11+dfsg-1build4		Id: 4/5

Calceus Health (copper-netlist reconstruction)

Sheet: /IO/
File: IO.kicad_sch

Title: Reid Orthotic v2 R4 RHS – IO (copper reconstruction)

Size: A2	Date: 2026-10-01	**Rev: R4**
KiCad E.D.A. kicad-cli 7.0.11+dfsg-1build4		Id: 5/5