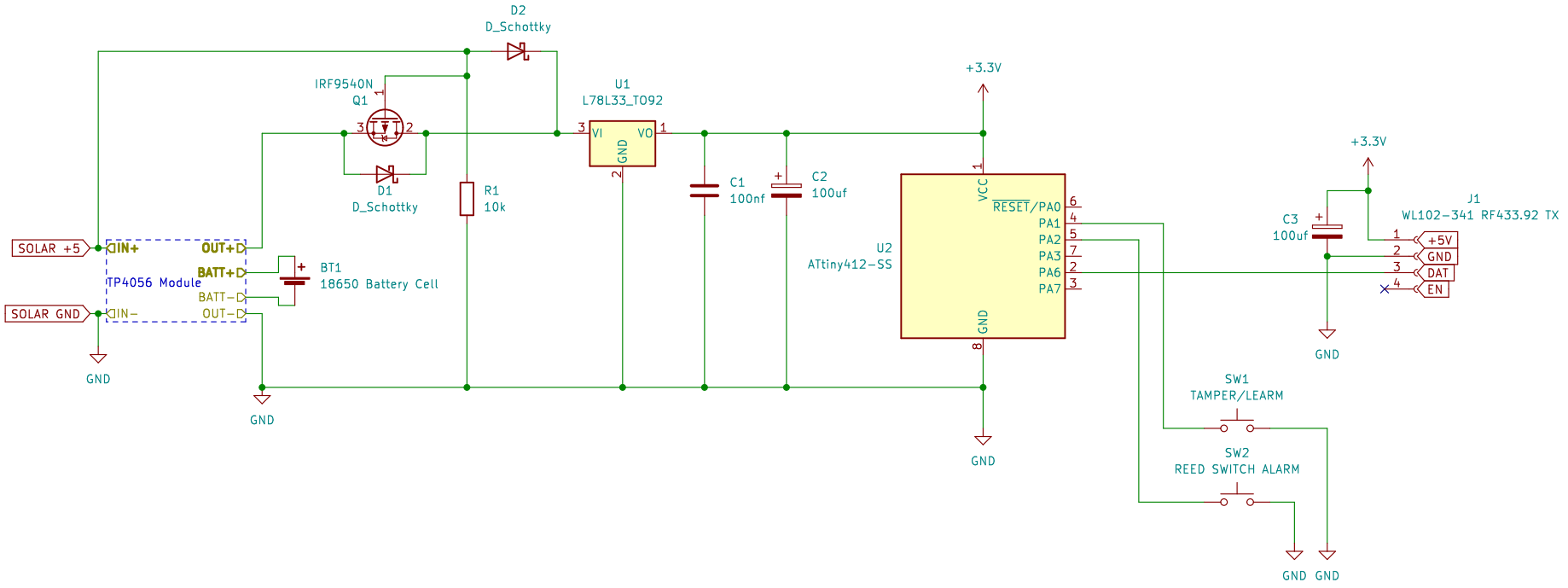

C.A Torino

This version runs an Attiny412 on a 8Mhz clock with 3.3 v.
Added 100uf across WL102-341 module.
L78L33 (no external parts needed but I added 100uf an 10nf for MCU stability).
Has a power path for TP4056 module. (Load sharing)

Sheet: /
File: ReedTiny412.kicad_sch

Title: ReedTiny412

Size: A4	Date: 3rd October 2022	Rev: V1.0
KiCad E.D.A. kicad (6.0.9)		Id: 1/1