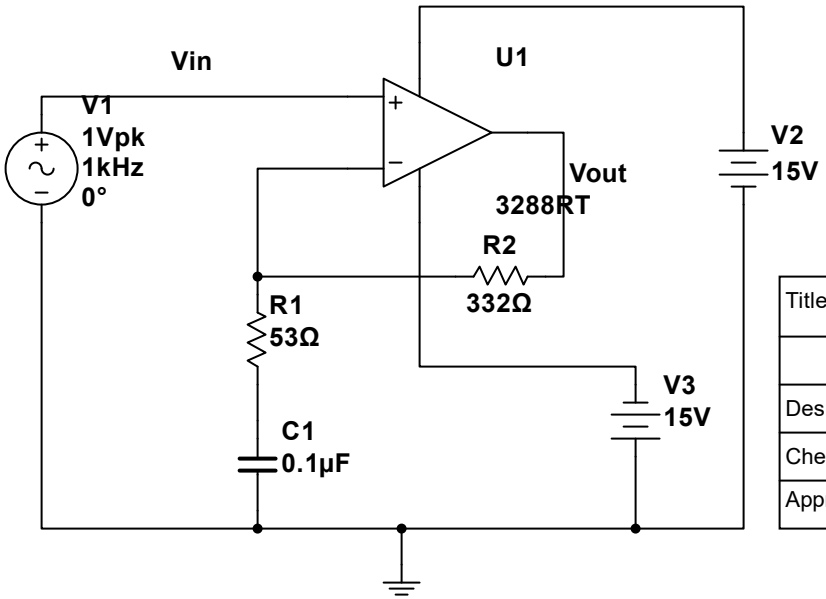

Title: Homework 5 Noninverting Highpass		
NoninvertingHighpass		
Designed by: Caleb Alexander	Document N:	Revision:
Checked by:	Date: 6/20/2018	Size: A
Approved by:	Sheet 1 of 1	