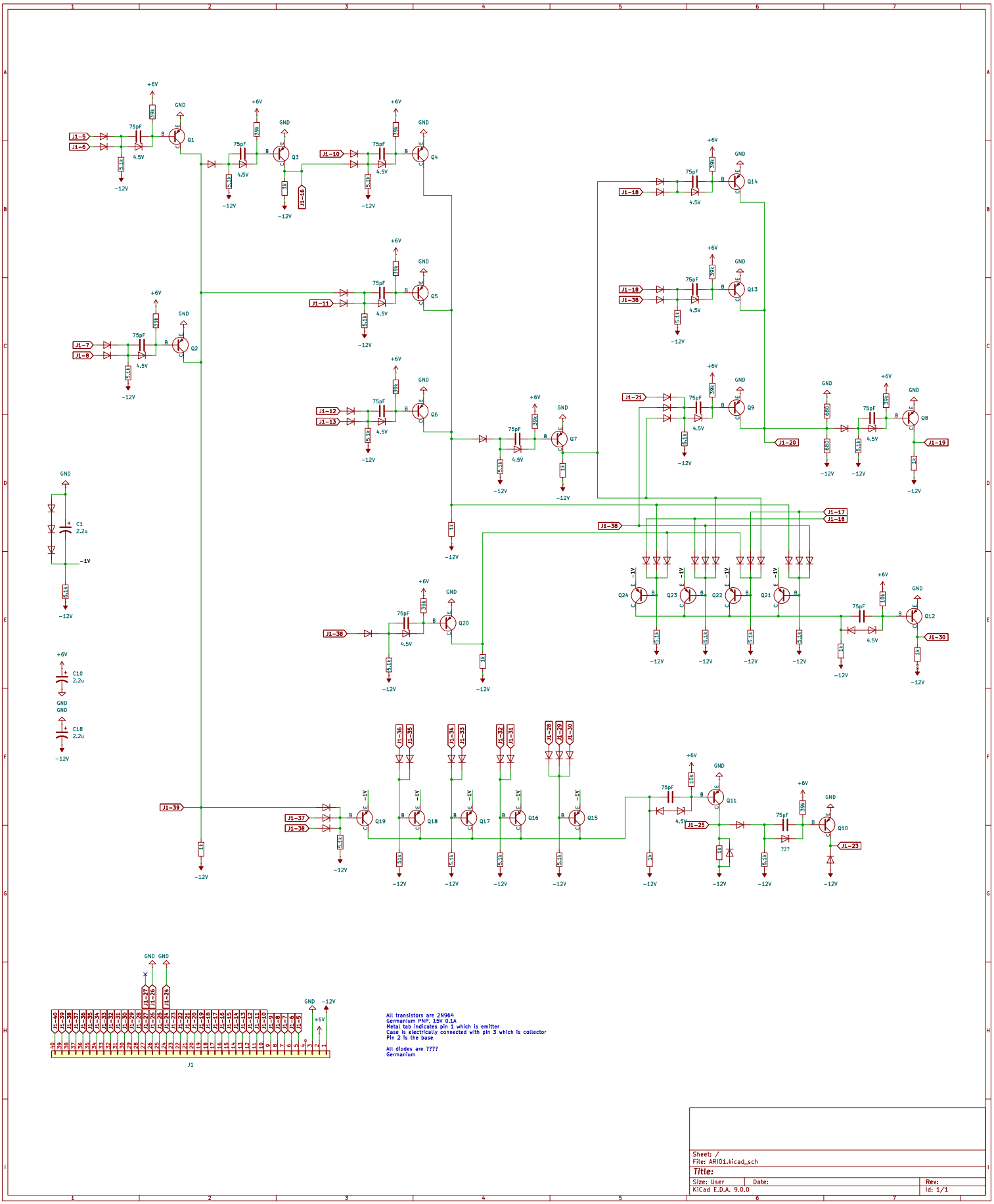

All transistors are 2N964
Germanium PNP, 15V 0.1A
Metal tab indicates pin 1 which is emitter
Case is electrically connected with pin 3 which is collector
Pin 2 is the base

All diodes are ????
Germanium

Sheet: /		
File: ARI01.kicad_sch		
Title:		
Size: User	Date:	Rev:
KiCad E.D.A. 9.0.0		Id: 1/1