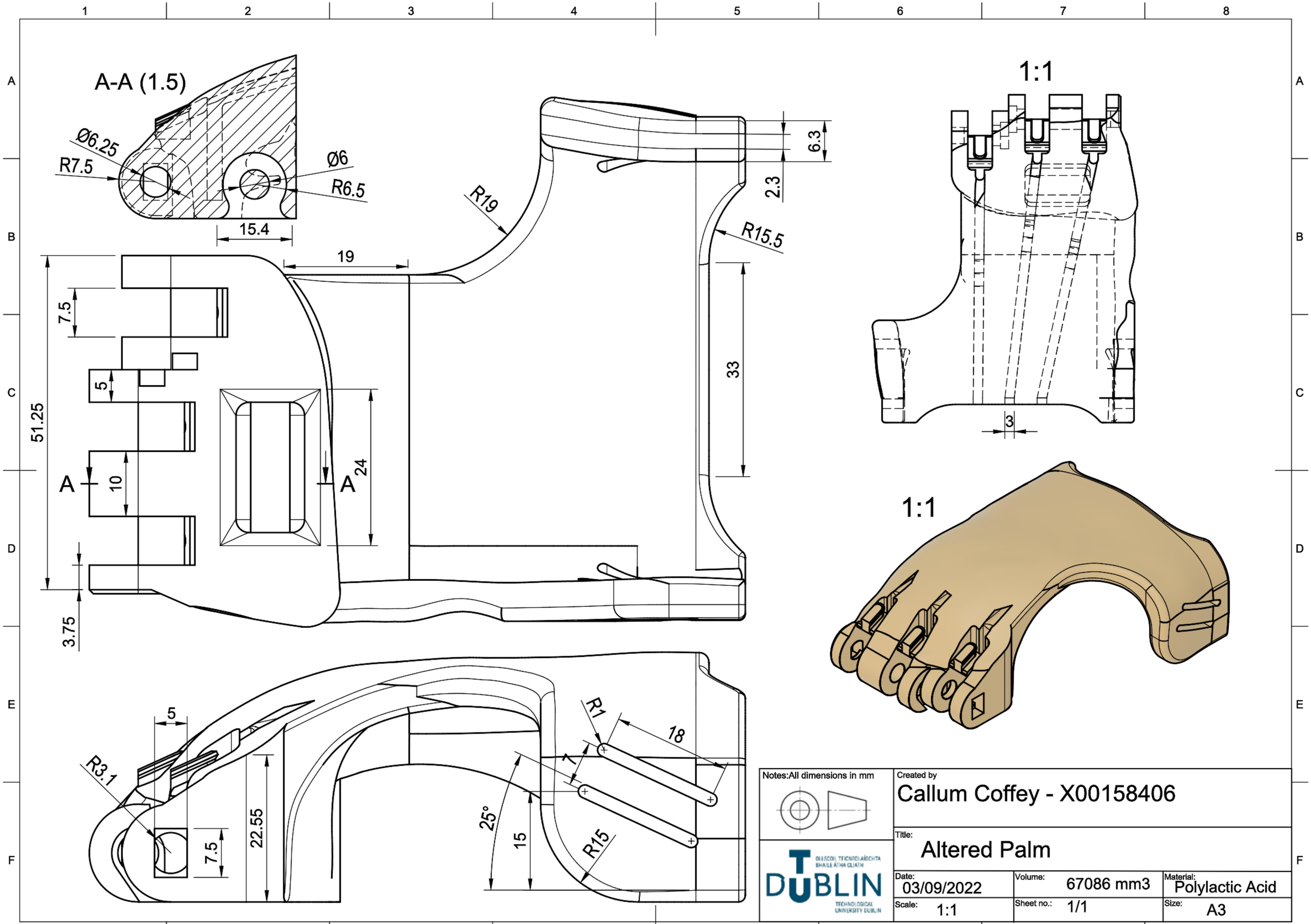


Notes: All dimensions in mm

Created by
Callum Coffey - X00158406

Title:
Altered Palm

| Date: | Volume: | Material: |
|---|---|---|
| 03/09/2022 | 67086 mm3 | Polylactic Acid |
| Scale: 1:1 | Sheet no.: 1/1 | Size: A3 |

DUBLIN TECHNOLOGICAL UNIVERSITY DUBLIN