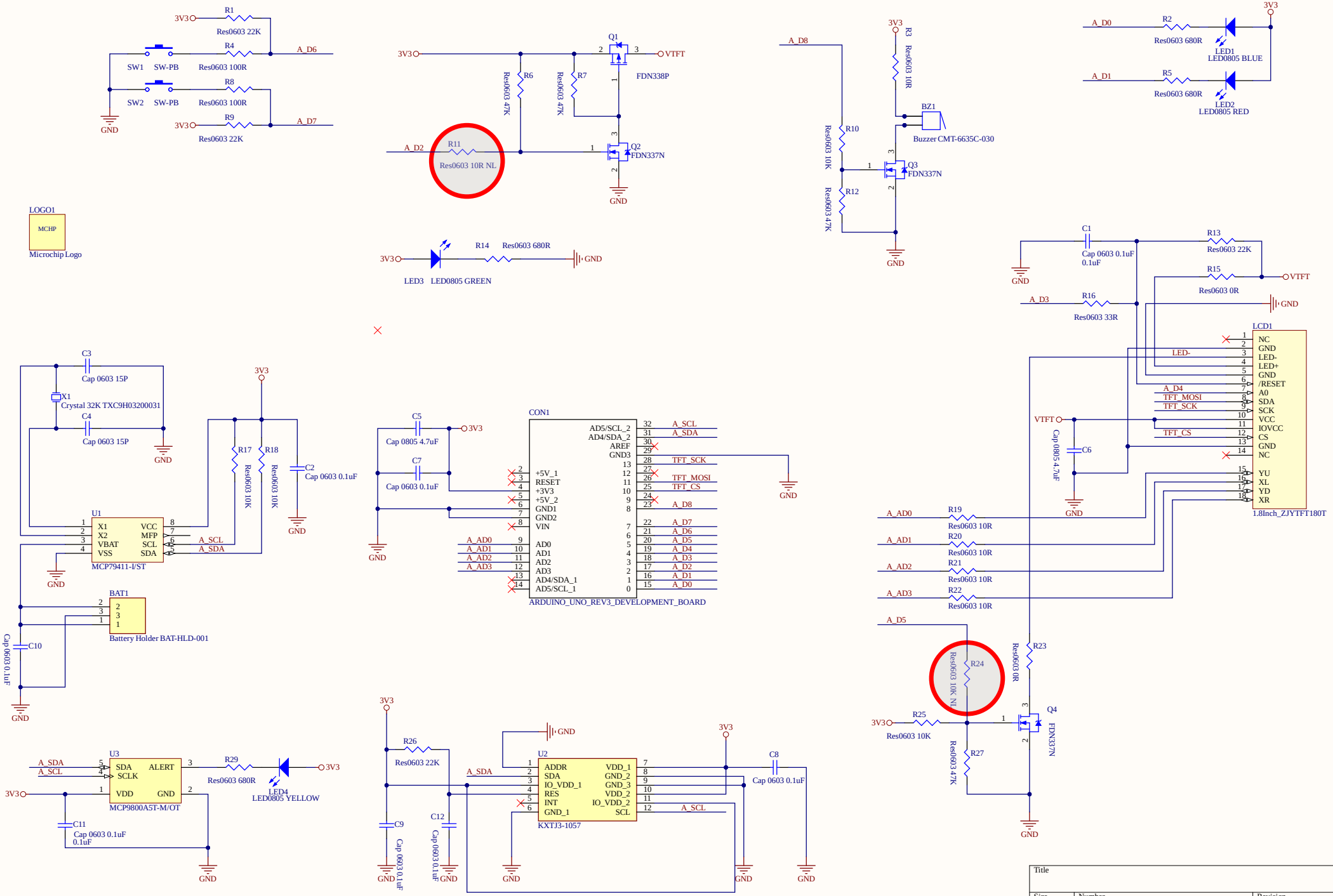
R1
Res0603 22K
3V3
R4
Res0603 100R
A_D6
SW1 SW-PB
R8
Res0603 100R
SW2 SW-PB
R9
Res0603 22K
A_D7
GND
Q1
FDN338P
VTFT
R6
Res0603 47K
R7
Res0603 47K
A_D2
R11
Res0603 10R NL
Q2
FDN337N
R14 Res0603 680R
LED3 LED0805 GREEN
A_D8
R3
Res0603 10R
BZ1
Buzzer CMT-6635C-030
R10
Res0603 10K
R12
Res0603 47K
Q3
FDN337N
A_D0
R2
Res0603 680R
LED1
LED0805 BLUE
A_D1
R5
Res0603 680R
LED2
LED0805 RED
LOGO1
MCHP
Microchip Logo
C1
Cap 0603 0.1uF
0.1uF
R13
Res0603 22K
R15
Res0603 0R
A_D3
R16
Res0603 33R
C3
Cap 0603 15P
X1
Crystal 32K TXC9H03200031
C4
Cap 0603 15P
R17
Res0603 10K
R18
Res0603 10K
C2
Cap 0603 0.1uF
U1
X1 VCC
X2 MFP
VBAT SCL
VSS SDA
A_SCL
A_SDA
MCP79411-I/ST
BAT1
Battery Holder BAT-HLD-001
C10
Cap 0603 0.1uF
C5
Cap 0805 4.7uF
C7
Cap 0603 0.1uF
CON1
AD5/SCL_2
AD4/SDA_2
AREF
GND3
+5V_1
RESET
+3V3
+5V_2
GND1
GND2
VIN
AD0
AD1
AD2
AD3
AD4/SDA_1
AD5/SCL_1
A_AD0
A_AD1
A_AD2
A_AD3
A_SCL
A_SDA
TFT_SCK
TFT_MOSI
TFT_CS
A_D8
A_D7
A_D6
A_D5
A_D4
A_D3
A_D2
A_D1
A_D0
ARDUINO_UNO_REV3_DEVELOPMENT_BOARD
LCD1
NC
GND
LED-
LED+
GND
/RESET
A0
SDA
SCK
VCC
IOVCC
CS
GND
NC
YU
XL
YD
XR
1.8Inch_ZJYTFT180T
C6
Cap 0805 4.7uF
R19
Res0603 10R
R20
Res0603 10R
R21
Res0603 10R
R22
Res0603 10R
A_D5
R24
Res0603 10K NL
R23
Res0603 0R
R25
Res0603 10K
R27
Res0603 47K
Q4
FDN337N
U3
SDA ALERT
SCLK
VDD GND
MCP9800A5T-M/OT
R29
Res0603 680R
LED4
LED0805 YELLOW
C11
Cap 0603 0.1uF
0.1uF
R26
Res0603 22K
C9
Cap 0603 0.1uF
C12
Cap 0603 0.1uF
U2
ADDR VDD_1
SDA GND_2
IO_VDD_1 GND_3
RES VDD_2
INT IO_VDD_2
GND_1 SCL
KXTJ3-1057
C8
Cap 0603 0.1uF
Title
Size
A3
Number
Revision
Date: 8/23/2023
Sheet of
File: C:\Dropbox\..\Arduino_TFT_LCD_2.SchDoc
Drawn By: