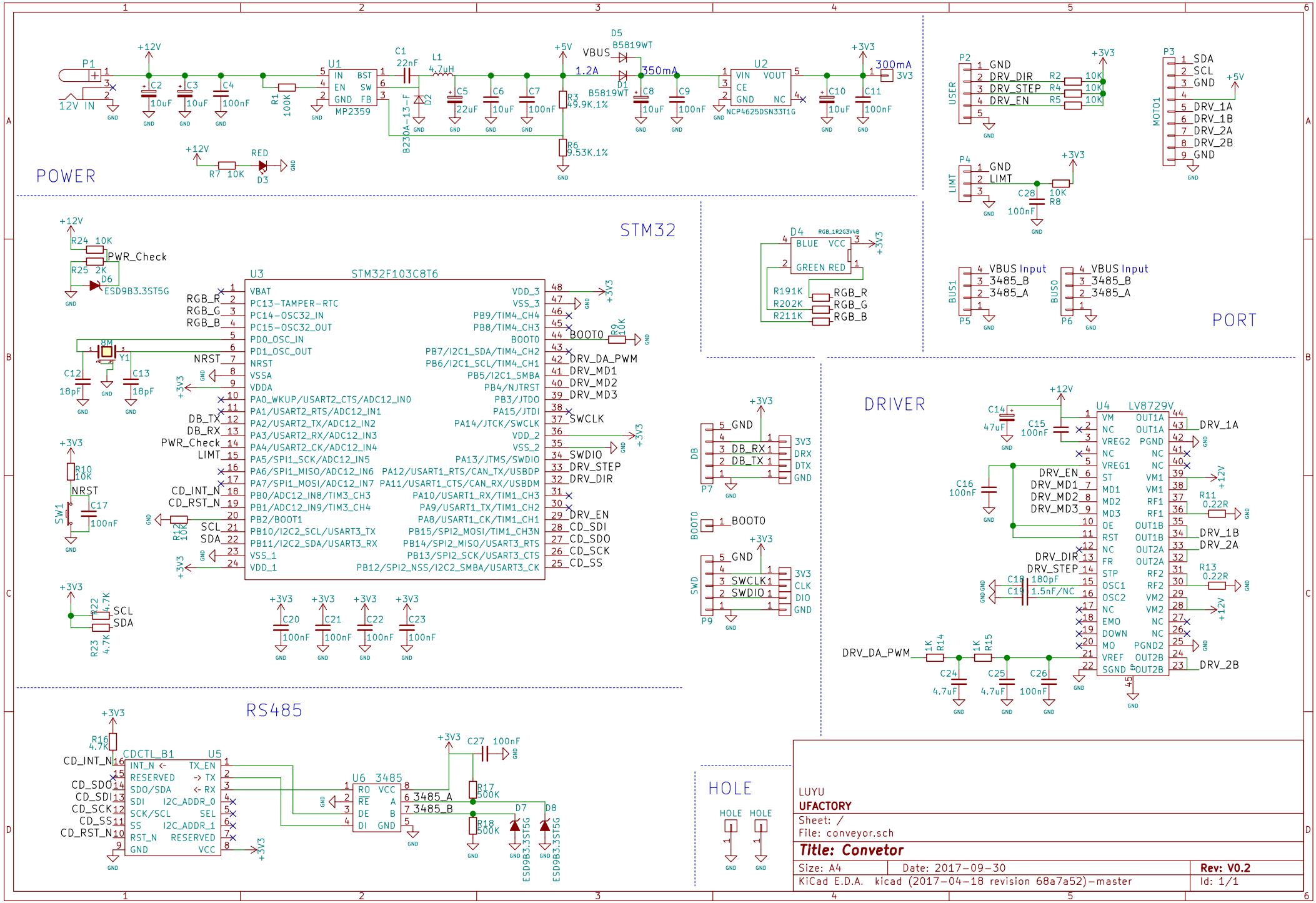
POWER
STM32
PORT
DRIVER
RS485
HOLE
U1 MP2359
U2 NCP4625DSN33T1G
U3 STM32F103C8T6
U4 LV8729V
U5 CDCTL_B1
U6 3485
P1 12V IN
P2 USER
P3 MOTO1
P4 LIMT
P5 BUS1
P6 BUS0
P7
P9
D4 RGB_1R2G3V4B
D5 B5819WT
D1 B5819WT
D2 B230A-13-F
D3 RED
D6 ESD9B3.3ST5G
D7 ESD9B3.3ST5G
D8 ESD9B3.3ST5G
Y1 8M
SW1
VBUS
1.2A
350mA
300mA
3V3
+12V
+5V
+3V3
GND
PWR_Check
RGB_R
RGB_G
RGB_B
NRST
LIMT
DB_TX
DB_RX
CD_INT_N
CD_RST_N
SCL
SDA
BOOT0
DRV_DA_PWM
DRV_MD1
DRV_MD2
DRV_MD3
SWCLK
SWDIO
DRV_STEP
DRV_DIR
DRV_EN
CD_SDI
CD_SDO
CD_SCK
CD_SS
DRV_1A
DRV_1B
DRV_2A
DRV_2B
3485_A
3485_B
VBUS Input
3485_A
3485_B
LUYU
UFACTORY
Sheet: /
File: conveyor.sch
Title: Convetor
Size: A4
Date: 2017-09-30
Rev: V0.2
KiCad E.D.A. kicad (2017-04-18 revision 68a7a52)-master
Id: 1/1