ORCAD X MECHANICAL KEYBOARD TUTORIAL PCB

Author: Gabriel de Lelis

Status: In layout

Project Description:

The OrCAD X Mechanical Keyboard Tutorial Video PCB is designed to be a full –size (100%) keyboard with an LCD display to be used as a calculator.
The LCD display is activated by using the Num Lock key as a tri-state switch between NumLock ON, NumLock OFF and Calculator Mode .

Top View:

Bottom View:

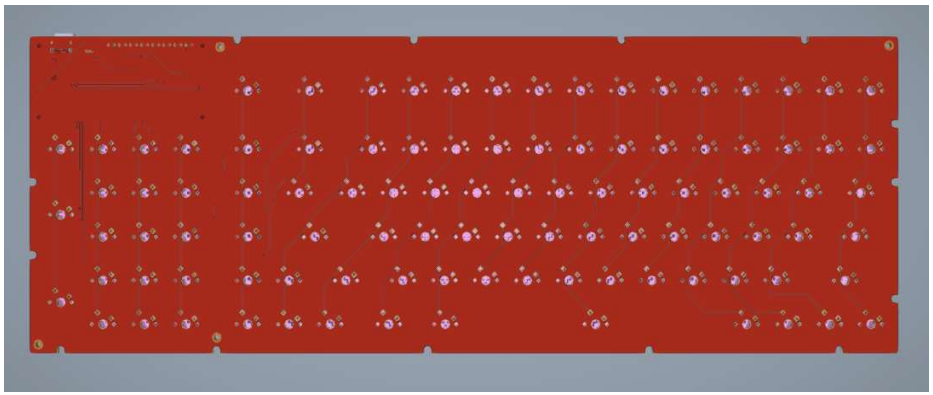

Top Iso View:

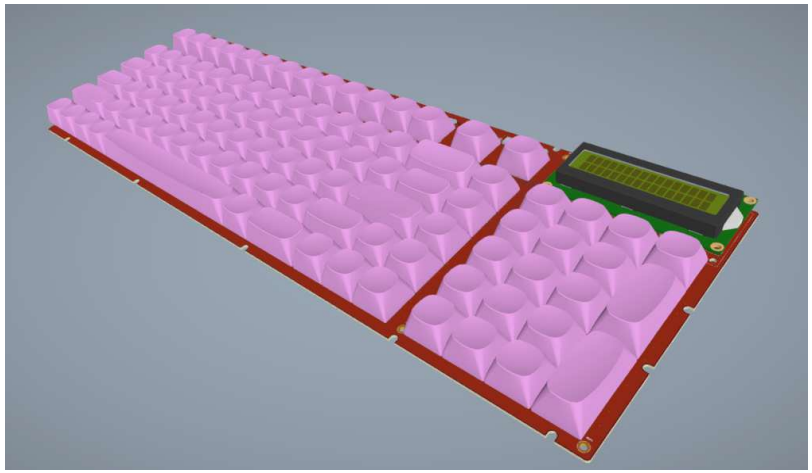

Title	KEYBOARD_GABRIEL	
Size A4	Document Number 1.0	Rev A
Date: Wednesday, April 29, 2026	Sheet 1 of 7	

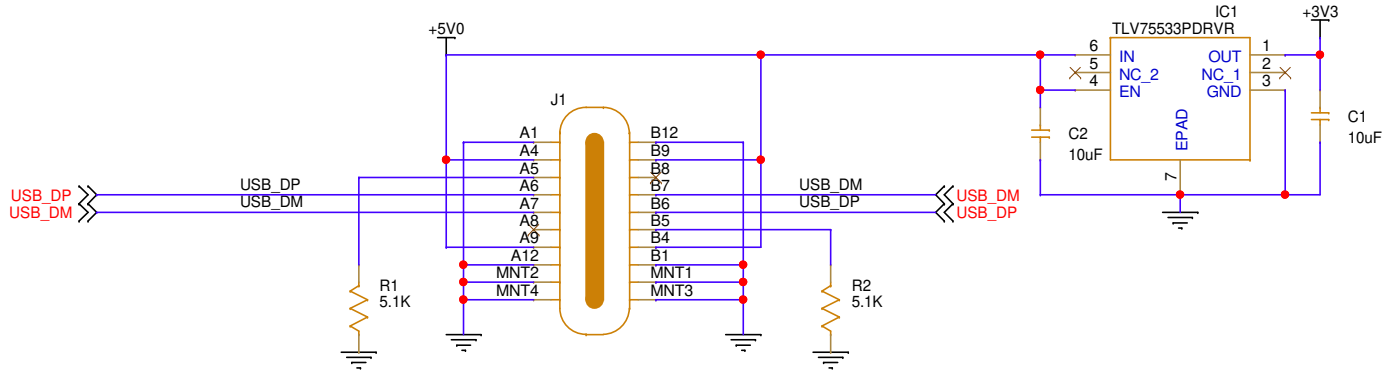

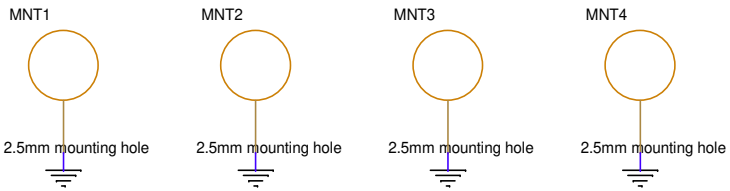

Title	KEYBOARD_GABRIEL	
Size A4	Document Number 1.0	Rev A
Date: Wednesday, April 29, 2026	Sheet 2 of 7	

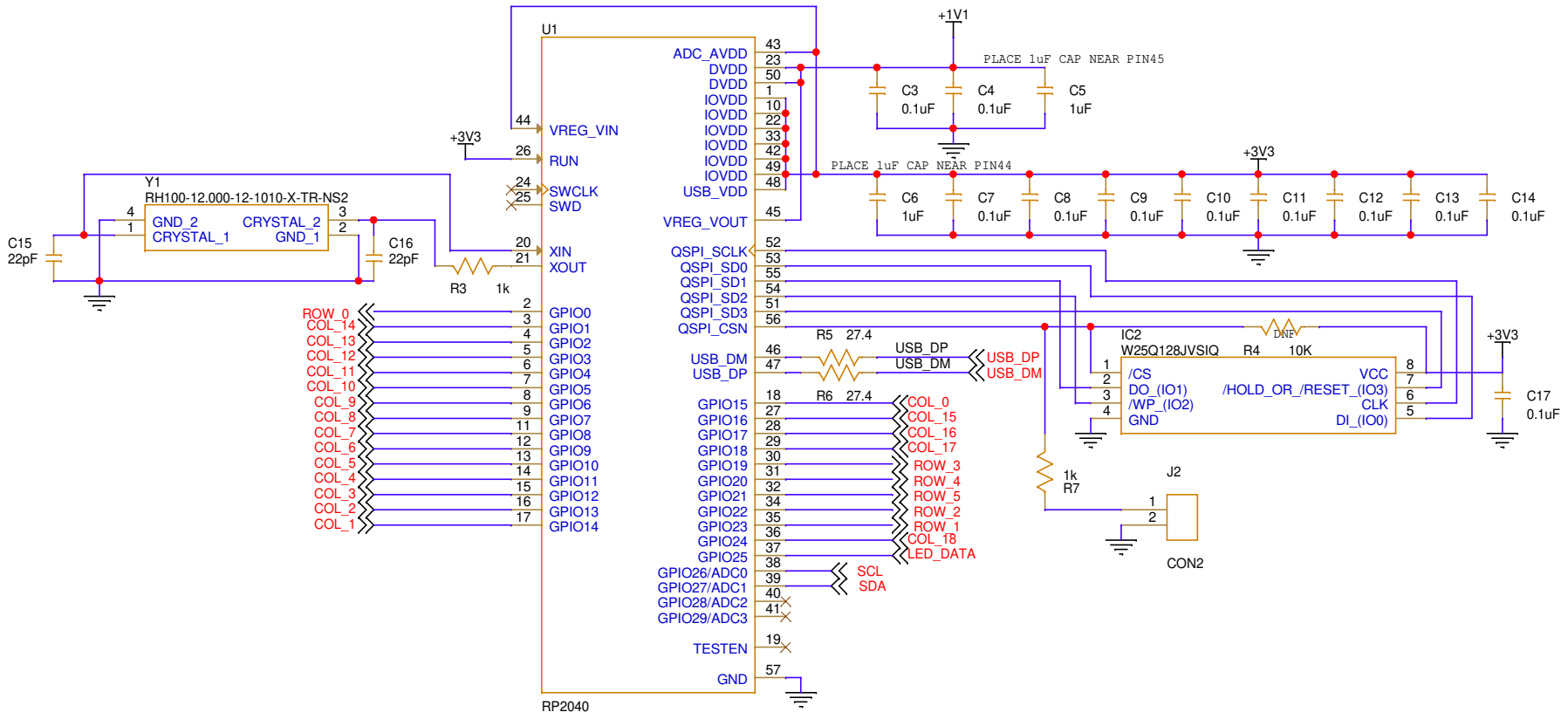

Title	KEYBOARD_GABRIEL	
Size A4	Document Number 1.0	Rev A
Date: Wednesday, April 29, 2026	Sheet 3 of 7	

Title	KEYBOARD_GABRIEL	
Size A3	Document Number 1.0	Rev A
Date: Wednesday, April 29, 2026	Sheet 4 of 7	

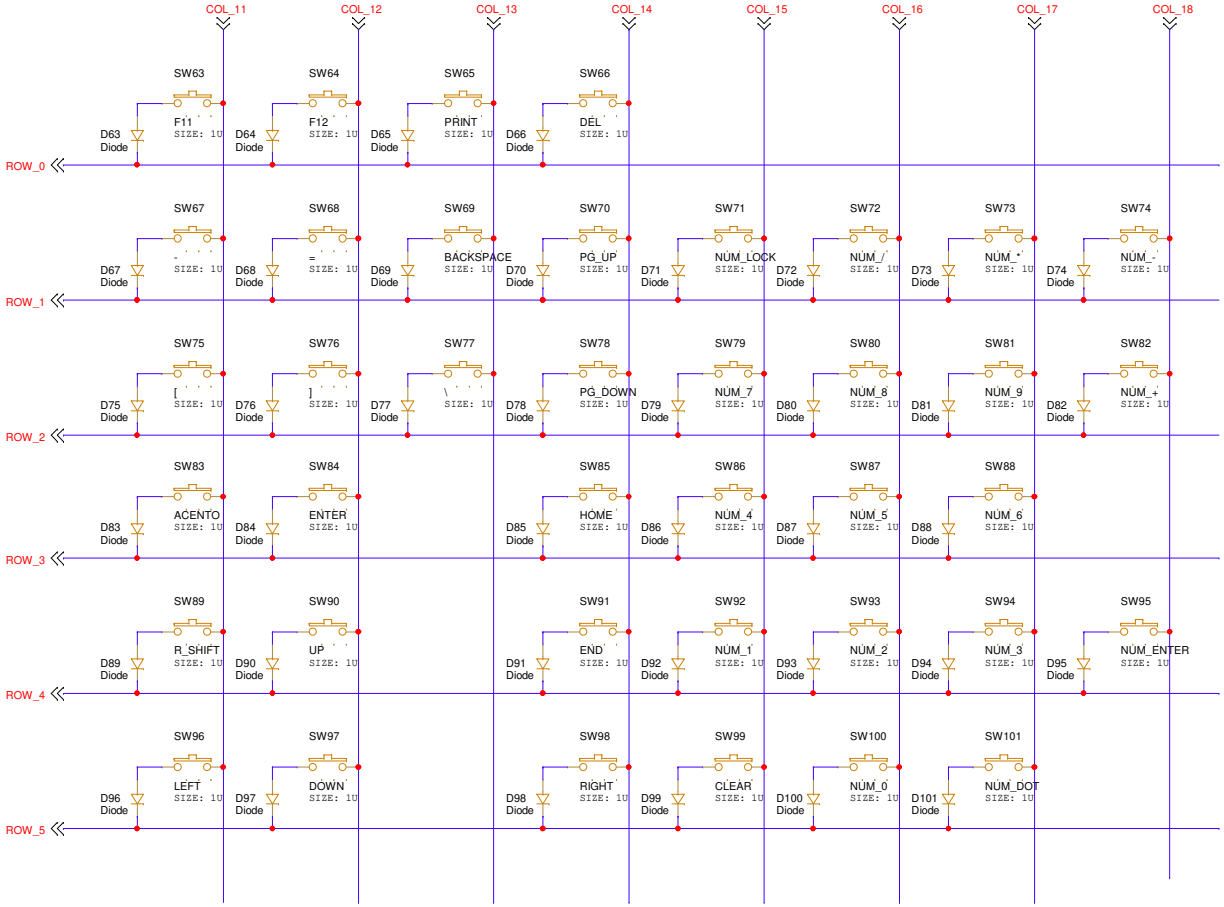

Title	KEYBOARD_GABRIEL	
Size A3	Document Number 1.0	Rev A
Date: Wednesday, April 29, 2026	Sheet 5 of 7	

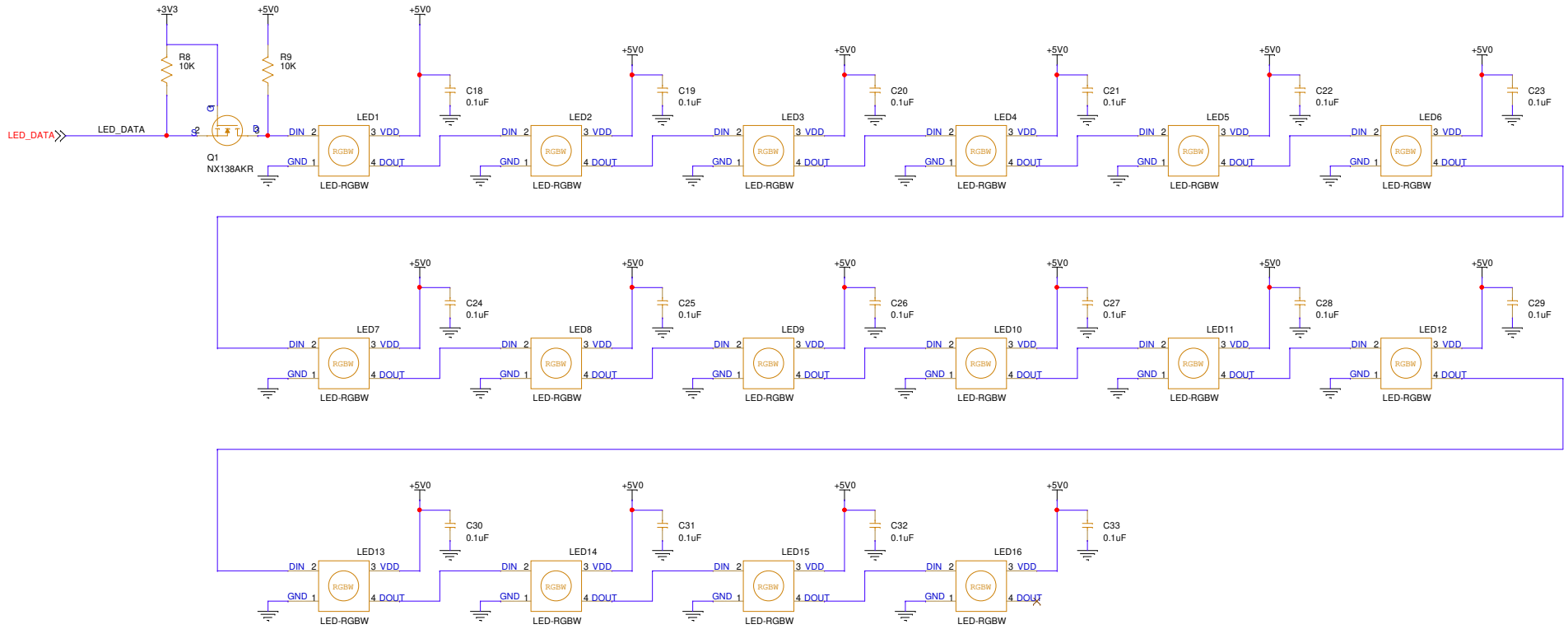

Title	KEYBOARD_GABRIEL	
Size A3	Document Number 1.0	Rev A
Date: Wednesday, April 29, 2026	Sheet 6 of 7	

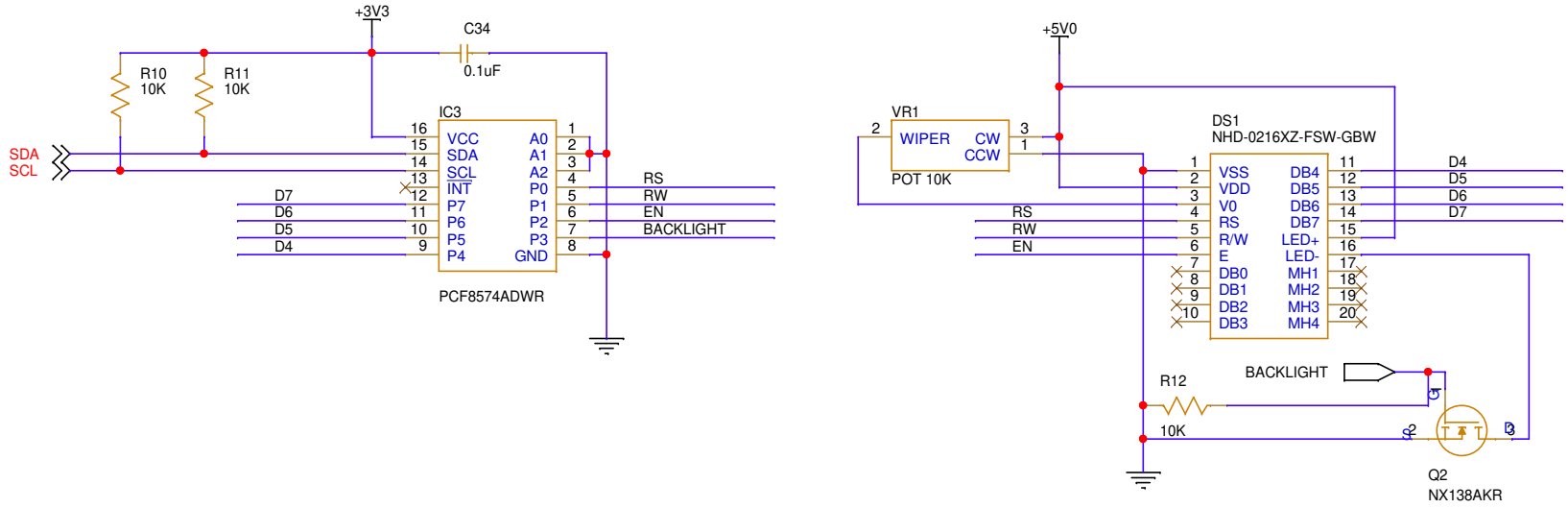

Title	KEYBOARD_GABRIEL	
Size A4	Document Number 1.0	Rev A
Date: Wednesday, April 29, 2026	Sheet 7 of 7	