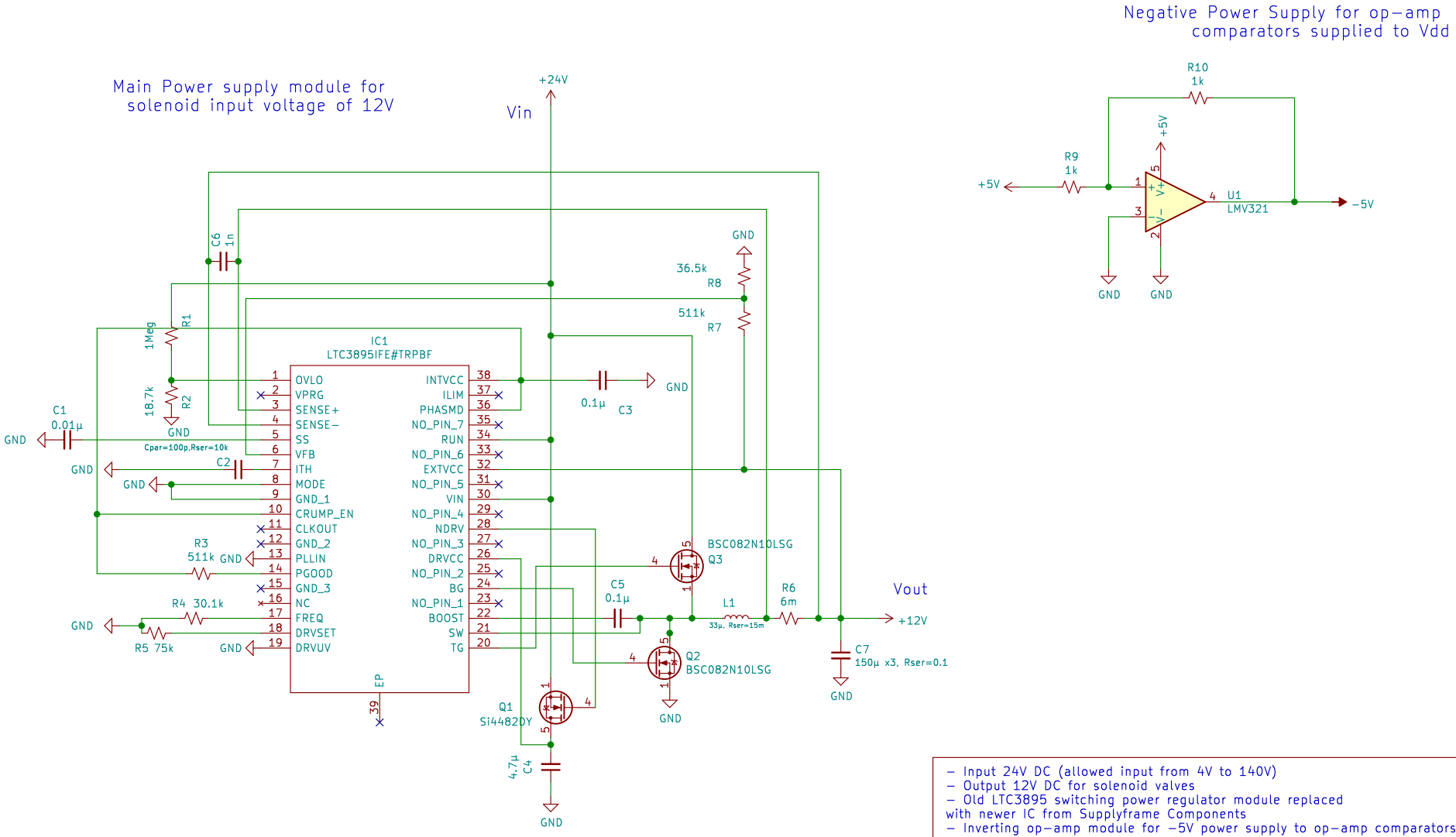

- Input 24V DC (allowed input from 4V to 140V)
- Output 12V DC for solenoid valves
- Old LTC3895 switching power regulator module replaced with newer IC from Supplyframe Components
- Inverting op-amp module for -5V power supply to op-amp comparators added

Sheet: 1/1
File: Power Module.sch

Title: Power Regulation Submodules

Size: A4	Date: 2021-05-28	Rev: 2.0
KiCad E.D.A. eeschema (5.1.10)-1		Id: 1/1