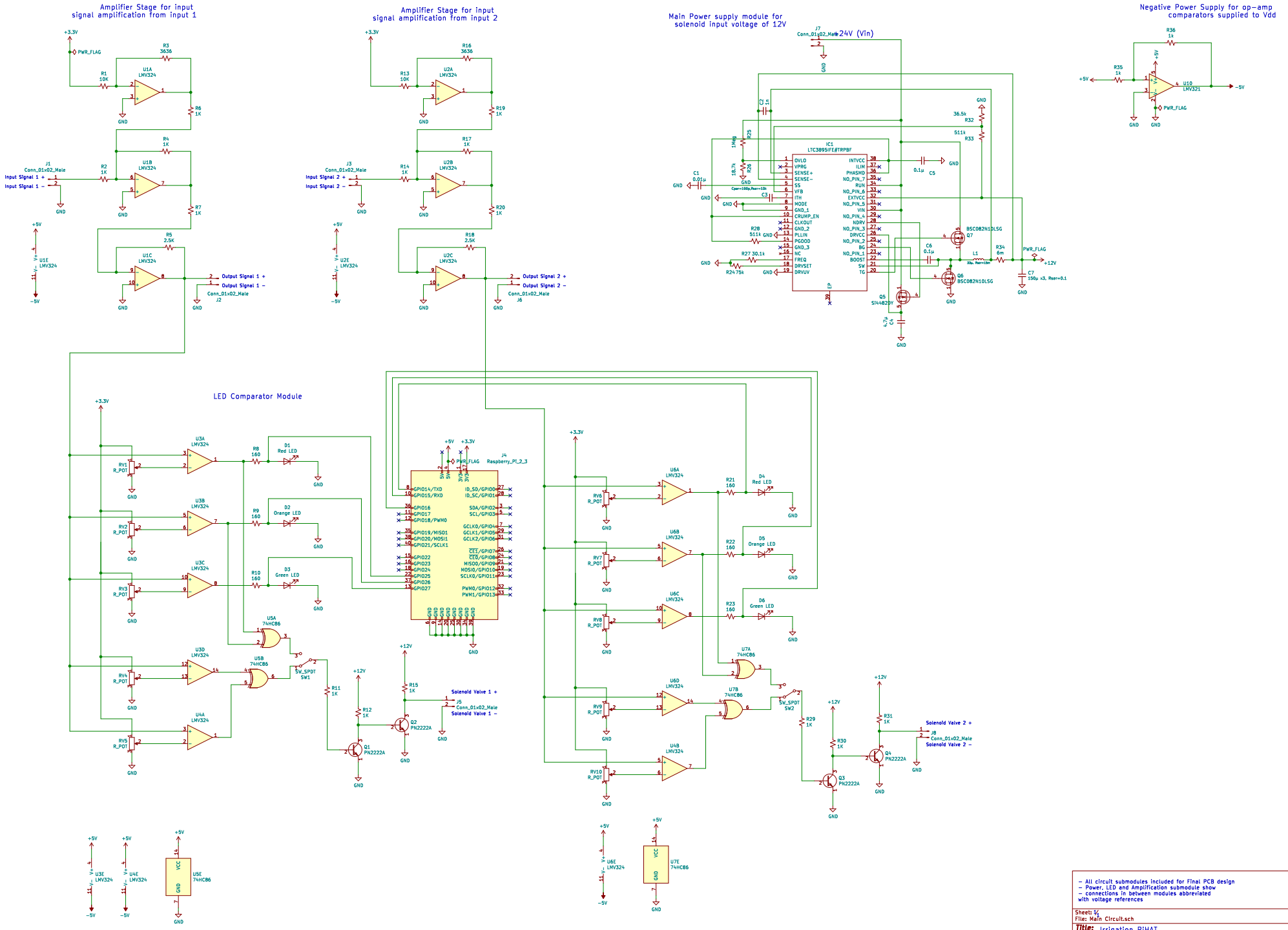

– All circuit submodules included for Final PCB design
– Power, LED and Amplification submodule show
– connections in between modules abbreviated
with voltage references

Sheet: 1/1
File: Main Circuit.sch

Title: Irrigation PIHAT

Size: A2	Date: 31/05/2021	Rev:
KiCad E.D.A. kicad (5.1.10)-1		Id: 1/1