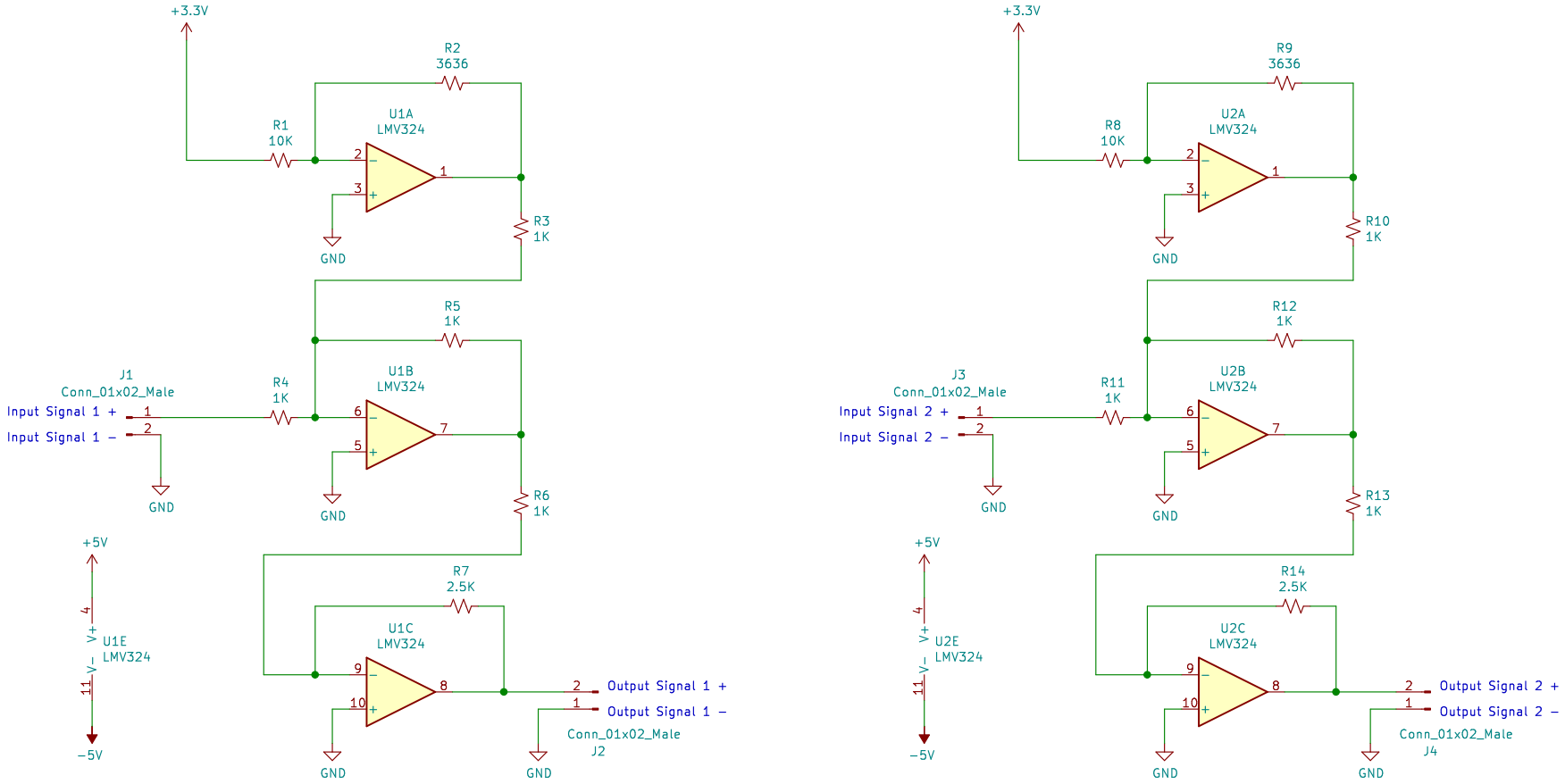

- 2 x Input 1.2 – 2.5 V signal from soil moisture sensors
- Output 2 x 0 – 3.3V amplified signal

Sheet: 1/1 File: Amplifier Submodule.sch		
Title: Amplifer Submodule		
Size: A4	Date: 12/04/2021	**Rev:** 0.1
KiCad E.D.A. eeschema (5.1.10)-1		Id: 1/1