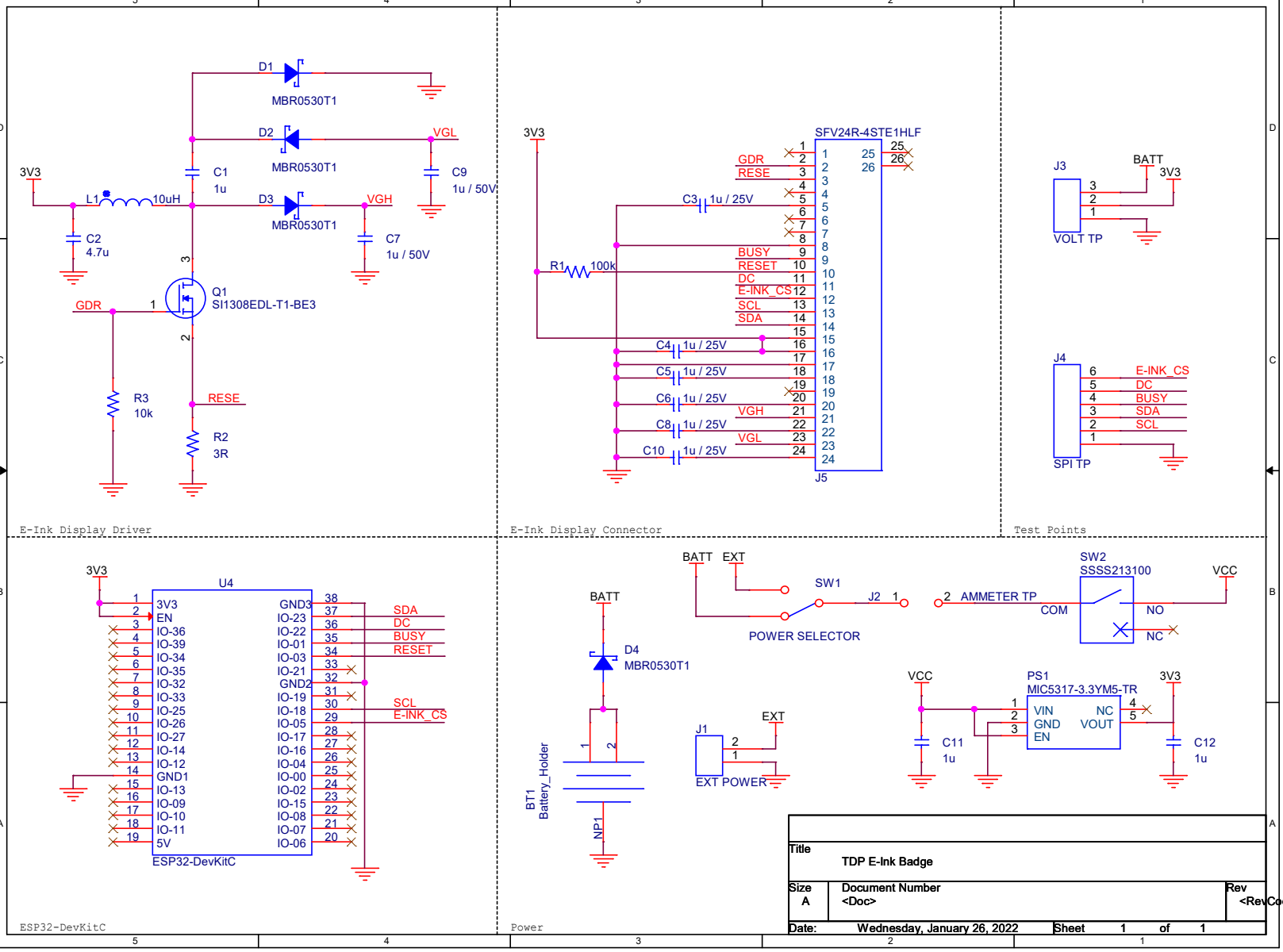
D1
MBR0530T1
D2
MBR0530T1
VGL
C9
1u / 50V
3V3
L1
10uH
C1
1u
D3
MBR0530T1
VGH
C7
1u / 50V
C2
4.7u
Q1
SI1308EDL-T1-BE3
GDR
R3
10k
RESE
R2
3R
E-Ink Display Driver
3V3
SFV24R-4STE1HLF
GDR
RESE
C3 1u / 25V
R1 100k
BUSY
RESET
DC
E-INK_CS
SCL
SDA
C4 1u / 25V
C5 1u / 25V
C6 1u / 25V
VGH
C8 1u / 25V
VGL
C10 1u / 25V
J5
E-Ink Display Connector
J3
BATT
3V3
VOLT TP
J4
E-INK_CS
DC
BUSY
SDA
SCL
SPI TP
Test Points
3V3
U4
3V3
EN
IO-36
IO-39
IO-34
IO-35
IO-32
IO-33
IO-25
IO-26
IO-27
IO-14
IO-12
GND1
IO-13
IO-09
IO-10
IO-11
5V
GND3
IO-23
IO-22
IO-01
IO-03
IO-21
GND2
IO-19
IO-18
IO-05
IO-17
IO-16
IO-04
IO-00
IO-02
IO-15
IO-08
IO-07
IO-06
SDA
DC
BUSY
RESET
SCL
E-INK_CS
ESP32-DevKitC
ESP32-DevKitC
BATT
EXT
SW1
J2
POWER SELECTOR
AMMETER TP
SW2
SSSS213100
VCC
COM
NO
NC
BATT
D4
MBR0530T1
BT1
Battery_Holder
NP1
J1
EXT
EXT POWER
VCC
C11
1u
PS1
MIC5317-3.3YM5-TR
VIN
GND
EN
NC
VOUT
3V3
C12
1u
Power
Title
TDP E-Ink Badge
Size
A
Document Number
<Doc>
Rev
<RevCod
Date: Wednesday, January 26, 2022
Sheet 1 of 1