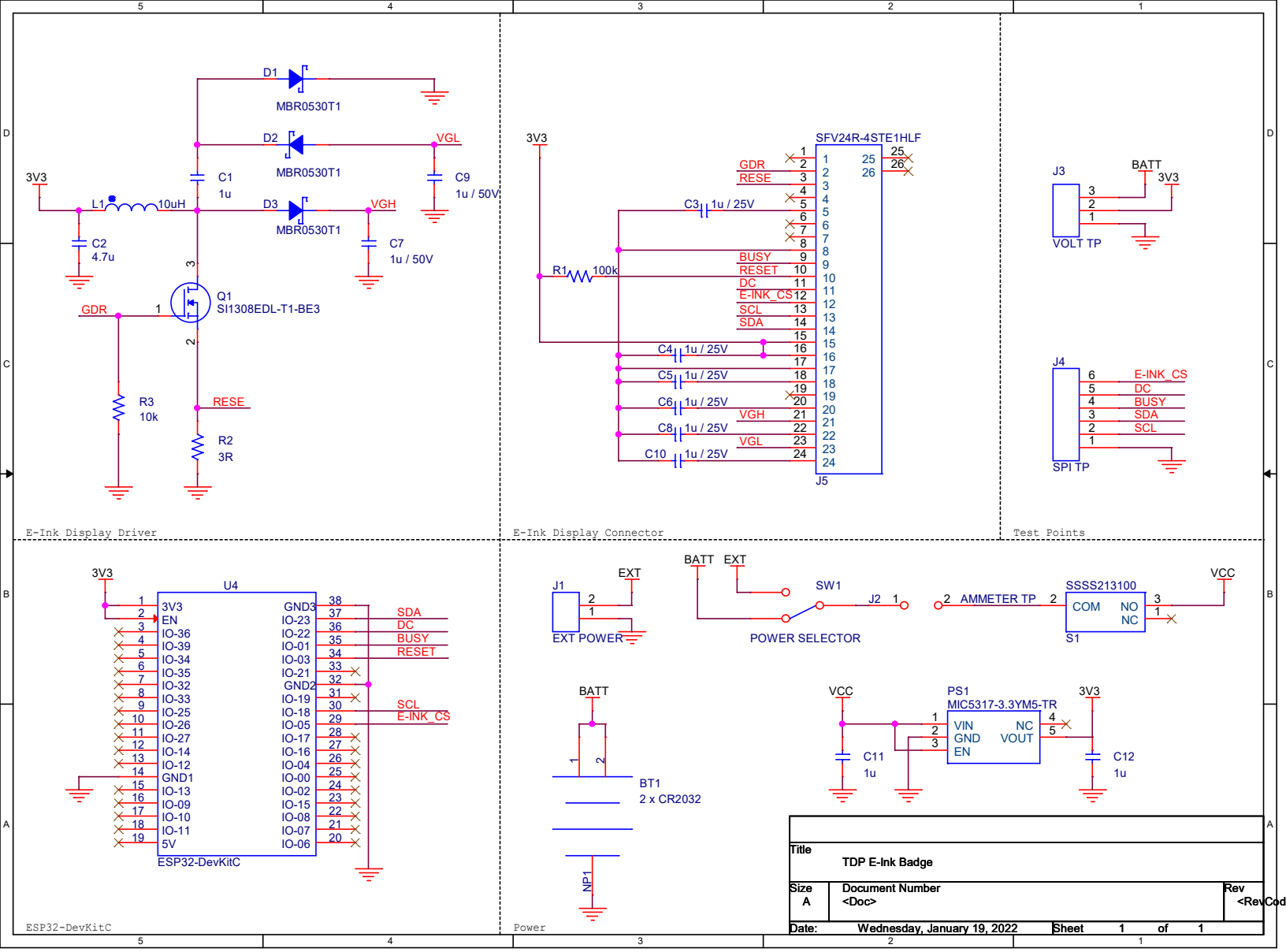
D1
MBR0530T1
D2
MBR0530T1
D3
MBR0530T1
VGL
VGH
3V3
L1
10uH
C1
1u
C2
4.7u
C9
1u / 50V
C7
1u / 50V
Q1
SI1308EDL-T1-BE3
GDR
RESE
R3
10k
R2
3R
E-Ink Display Driver
SFV24R-4STE1HLF
J5
R1
100k
C3
1u / 25V
C4
1u / 25V
C5
1u / 25V
C6
1u / 25V
C8
1u / 25V
C10
1u / 25V
BUSY
RESET
DC
E-INK_CS
SCL
SDA
E-Ink Display Connector
J3
BATT
VOLT TP
J4
SPI TP
Test Points
U4
ESP32-DevKitC
3V3
EN
IO-36
IO-39
IO-34
IO-35
IO-32
IO-33
IO-25
IO-26
IO-27
IO-14
IO-12
GND1
IO-13
IO-09
IO-10
IO-11
5V
GND3
IO-23
IO-22
IO-01
IO-03
IO-21
GND2
IO-19
IO-18
IO-05
IO-17
IO-16
IO-04
IO-00
IO-02
IO-15
IO-08
IO-07
IO-06
SDA
DC
BUSY
RESET
SCL
E-INK_CS
ESP32-DevKitC
J1
EXT
EXT POWER
BATT
EXT
SW1
J2
POWER SELECTOR
AMMETER TP
SSSS213100
COM
NO
NC
S1
VCC
BATT
BT1
2 x CR2032
NP1
VCC
PS1
MIC5317-3.3YM5-TR
VIN
GND
EN
NC
VOUT
C11
1u
C12
1u
3V3
Power
Title
TDP E-Ink Badge
Size
A
Document Number
<Doc>
Rev
<RevCod
Date:
Wednesday, January 19, 2022
Sheet
1
of
1