Camilo Artigas

(647) 836-0531 | cartigas@uwaterloo.ca

Dual Canadian & US Citizen

Website | LinkedIn | GitHub

Skills

EE: Altium, KiCAD, LTSpice, Bring-up, Prototyping, Soldering & Harnessing, Oscilloscopes, Power Electronics, Sensors.
SWE / FW: Python, C++, Arduino, STM32, MATLAB, UART, RS-485/Modbus, Git, Ubuntu, RTOS, NumPy, Matplotlib
ME: Siemens NX, SolidWorks, GD&T, DFMA, Structural/Modal FEA, FDM/SLA Printing, Mill, Lathe, CNC, Sheet Metal

Experience

Mechatronics Engineering Intern — Jan. 2026 – Present

Zipline — *South San Francisco, CA*

- Integrated current sensors into existing 8-layer winch motor control PCB in Altium, owning schematics, layout, and bring-up while preserving full functionality and signal integrity.
- Enabled full aircraft accelerated testing by retrofitting a shipping container into an environmental chamber, integrating an Arduino Opta and 8 RS-485 sensors to actuate heaters and misters via relays.
- Developed multi-threaded C++ firmware for real-time control of chamber via Modbus and a Python dashboard for data visualization; tuning duty cycles and tolerances to maintain 65 °C and 85% RH for 30 days.
- Designed 2 PCBs for PTCE and vibration testing of EV3 Battery in Altium, integrating voltage sensing.
- Designed a Motor Rotor Spinner to validate magnet epoxy strength in NX, achieving 30,000 RPM and 150°C via a 1:5 reduction belt drive, rod heaters, and thermocouples; owned hardware architecture and test automation.
- Designed 3 aluminum vibration fixtures in NX for launch-critical EV3 Battery, Distribution Board, and Bus Bar testing, performing Modal Analysis to maximize first-mode natural frequency and stiffness while optimizing DFMA.

Sensor Hardware Engineering Intern — May 2025 – Aug. 2025

Kodiak Robotics — *Mountain View, CA*

- Designed and brought up a modular sensor cleaning test bench, integrating an in-house PCB with C++ firmware and Python test scripts to enable repeatable, plug-and-play validation across multiple sensors, reducing setup time by 70%.
- Designed and prototyped a liquid and air sensor cleaning system with 12 nozzles, optimizing pressure and angle for LIDAR, WFOV, and NFOV cameras — ensuring reliable perception for fully autonomous trucks.
- Designed a sheet metal enclosure in SolidWorks to house pneumatics for the air cleaning system, applying DFMA principles to reduce on-road troubleshooting time by 30% and personally mounting the full assembly onto the truck.
- Validated full cleaning system performance by WFOV/NFOV camera image capture and LiDAR PCAPs during operation.

Mechatronics Engineering Intern — Sep. 2024 – Dec. 2024

Sheartak Tools Ltd. — *Waterloo, ON*

- 3D modelled 10+ spiral cutterheads in SolidWorks, drafting technical drawings using GD&T to specify critical tolerances.
- Developed Python scripts with OpenPyXL and NumPy, automating the migration of 500+ products, saving 30+ hours.
- Performed 6 installations on planers and jointers in less than 7 hours, installing 50+ carbide blades per cutterhead.

Leadership

Hardware Director & Founder — Dec. 2025 – Present

Waterloo Automation Collective — *Waterloo, ON*

- Leading all hardware and software development of UWaterloo's first injection molder. Running meetings, design reviews and mentoring 15+ students.
- Leading in-house PCB development in Altium, prioritizing DFMA, cost optimization and performance.
- Owning master-model of injection molder in SolidWorks, overseeing and modelling frame and injection unit assemblies.

Mechanical Lead & Designer — Aug. 2024 – Dec. 2025

Waterloo Aerial Robotics Group — *Waterloo, ON*

- Co-led the mechanical team ahead of the 2026 competition, owning and managing the Task 1 Payload within the Hexacopter assembly. Leading meetings, design reviews and mentoring 15+ students.
- Led the design of the drone's landing gear in SolidWorks for the 2025 competition, angling its legs to ensure concentricity with bucket for water retrieval; implementing depth limiters, anti-tipping bars and carbon fiber members.

Education

University of Waterloo — Sep. 2023 – Apr. 2028

Candidate for a Bachelor of Applied Science in Mechatronics Engineering — *Waterloo, ON*

Relevant Coursework: Sensors & Instrumentation, Mechanics of Materials, Embedded Systems, Materials Science

Camilo Artigas

(647) 836-0531 | cartigas@uwaterloo.ca

Dual Canadian & US Citizen

Website | LinkedIn | GitHub

Infinite Sustain Guitar Pedal | *Altium, LT Spice, Signal Processing, Simulation*

Designed an infinite sustain guitar pedal, using 6 different stages of amplification and signal processing. Achieving infinite sustain (with threshold) for a plucked note. Currently working on the PCB and mechanical enclosure.

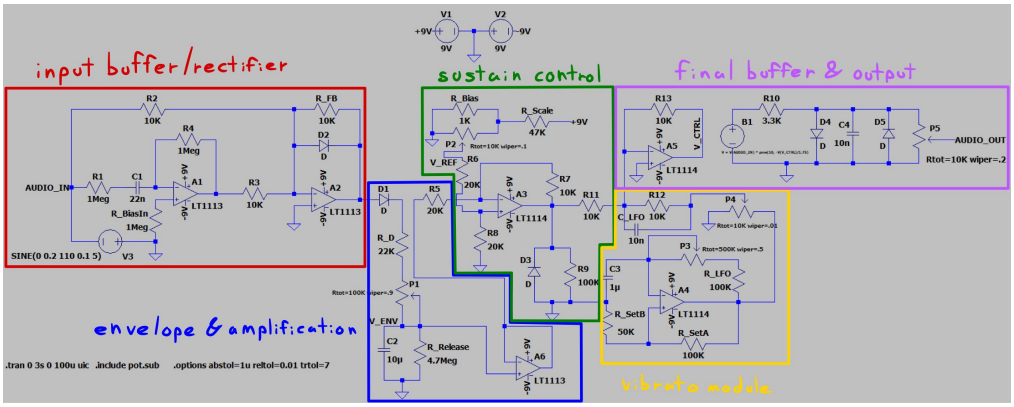

LT Spice Schematic

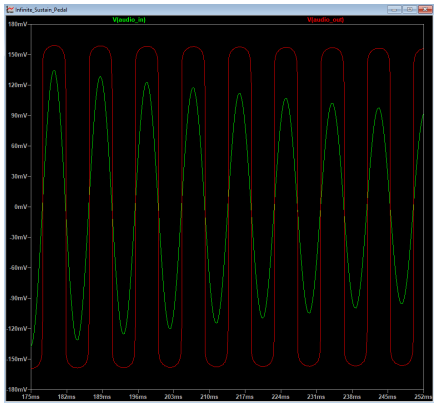

LT Spice Simulation
[Input → Green, Output → Red]

Sensor Cleaning @ Kodiak | *SolidWorks, Python, Systems Integration, Test Engineering, Pneumatics*

Designed and prototyped a liquid and air sensor cleaning system optimizing pressure and angle for a LiDAR and WFOV/NFOV cameras. Actuated it by bringing up a modular sensor cleaning test bench, integrating an in-house PCB with Python and C++ automation scripts. Validated full system by capturing synchronized images and LiDAR PCAPs during operation.

Kodiak Commercial Sensor Pod Assembly

Sensors in cleaning system: WFOV, NFOV Cameras and OT-128 LiDAR

Camilo Artigas

(647) 836-0531 | cartigas@uwaterloo.ca

Dual Canadian & US Citizen

Website | LinkedIn | GitHub

Cycloidal Actuator | *SolidWorks, 3D Printing, DFMA, Python, Stepper Motors*

Designed a 130+ part assembly achieving a gear ratio of 23:1 using a cycloidal speed reducer. Developed a Python script for instant visualization of the cycloid and 3D printed a backlash-free prototype. (Code)

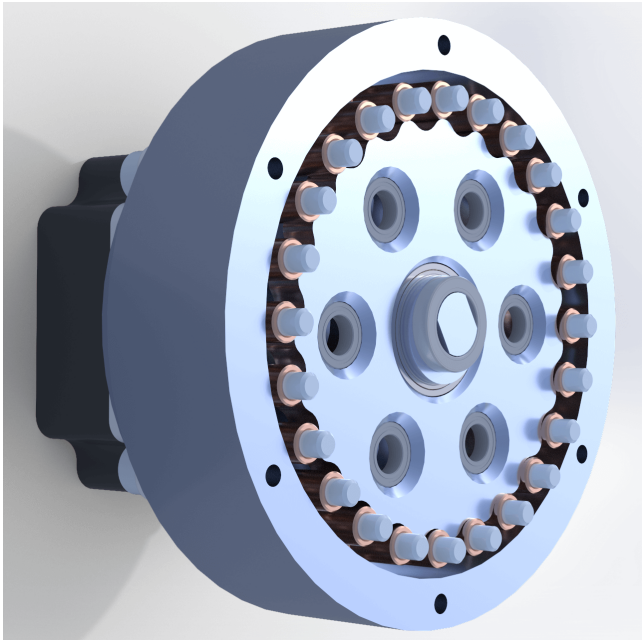

SolidWorks Model

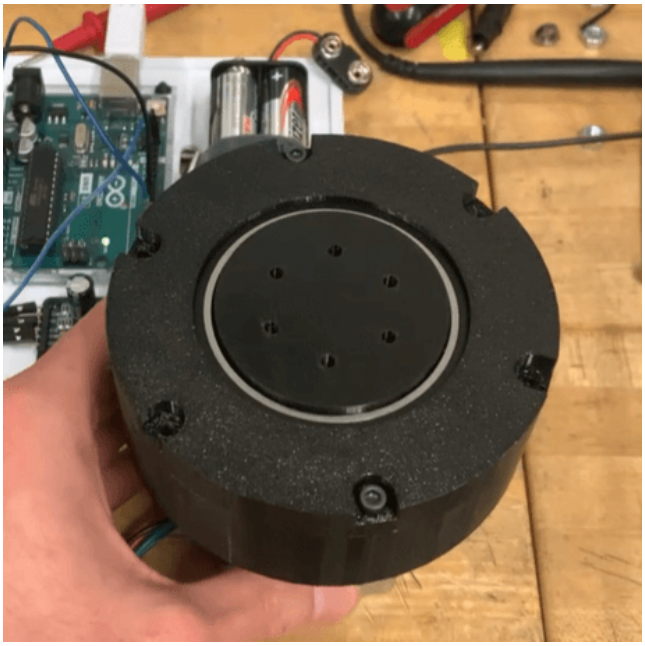

Functional Prototype → WATCH HERE

6-DOF Robotic Arm | *SolidWorks, Altium, Power Electronics, ROS, PID Control, Systems Integration*

Designing a 6-DOF Robotic Arm capable of a 3 kg payload, integrating my own gearboxes, stepper motors, machined parts and inverse kinematics. Projected to begin manufacturing in Oct 2025.

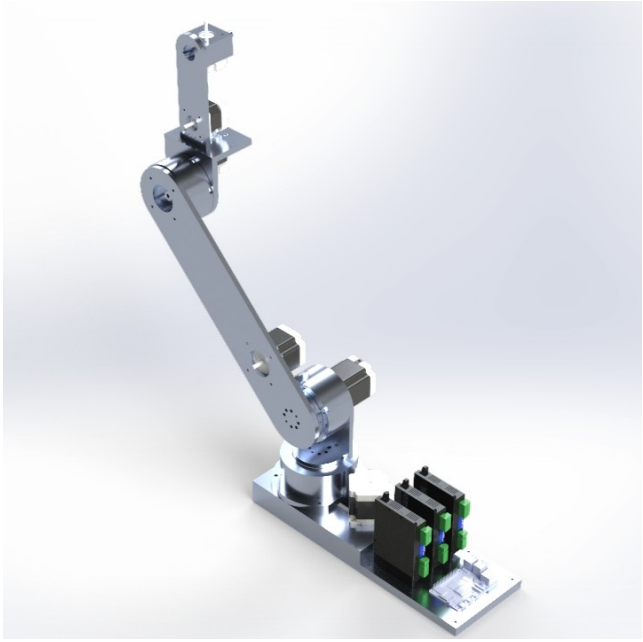

SolidWorks Model

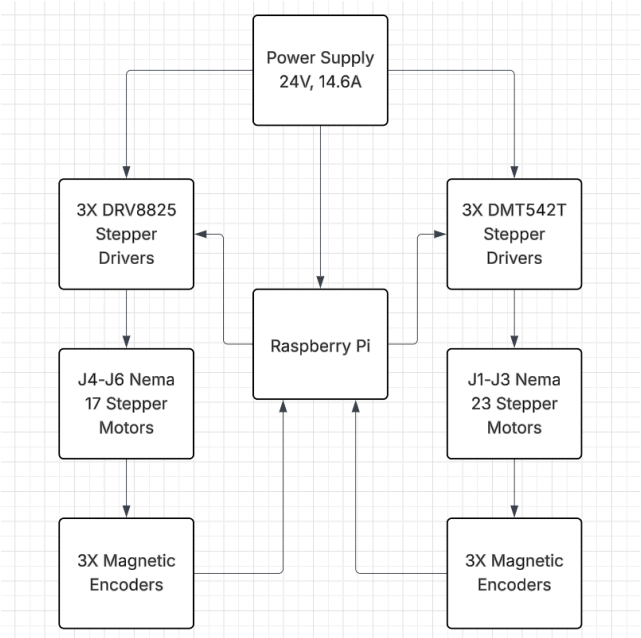

High Level Architecture

Camilo Artigas

(647) 836-0531 | cartigas@uwaterloo.ca

Dual Canadian & US Citizen

Website | LinkedIn | GitHub

3-DOF Robotic Arm | *SolidWorks, 3D Printing, DFMA, Python, C++, UART, Servo Motors*

Designed and programmed a robotic arm by deriving its inverse kinematics, achieving smooth movement along the x, y, and z axes using servo motors. Established serial communication between a Python GUI and Arduino IDE for precise control. (Code)

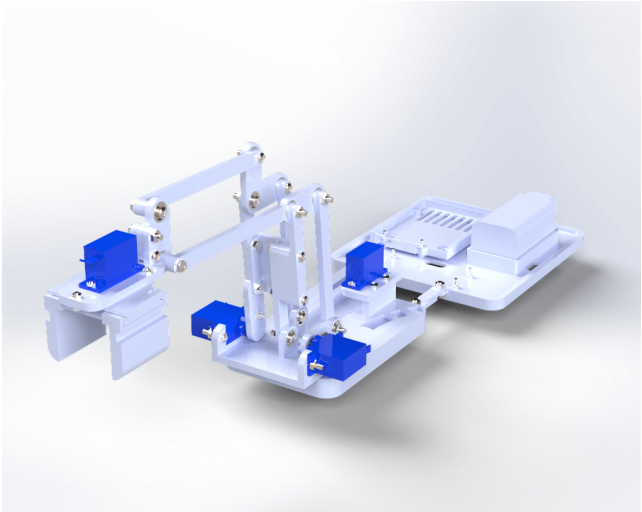

SolidWorks Model

Robotic Arm Controlled with GUI → WATCH HERE

Angled Landing Gear @ WARG | *SolidWorks, Test Engineering, Parametric Modelling*

Designed landing gear tailored towards WARG's competition challenge: water retrieval by landing on a barrel. Implemented parametric modelling, saving 10 hours. Added key features such as: optimal angle, anti-tipping bars and depth limiters. The landing gear was successful every time it was tested.

SolidWorks Overview

Landing Gear in Action → WATCH HERE