Camilo Artigas

(647) 836-0531 | cartigas@uwaterloo.ca

Dual Canadian & US Citizen

Website | LinkedIn | GitHub

Skills

ME: Siemens NX, SolidWorks, GD&T, DFMA, Structural/Modal FEA, FDM/SLA Printing, Mill, Lathe, CNC, Composites
SWE / FW: Python, C++, Arduino, STM32, MATLAB, UART, RS-485/Modbus, ROS, Git, Ubuntu, RTOS, NumPy, Matplotlib
EE: Altium, LTSpice, Soldering, Harnessing, Crimping, Oscilloscope/Lab Tools, Stepper/Servo Motors, Sensors, Actuators

Experience

Mechatronics Engineering Intern — Jan. 2026 – Present

Zipline — *South San Francisco, CA*

- Owned and executed a 30-day long high-temp & humidity test on two EV3 drones and two EV4 docks by mechanically and electrically designing an automated environmental control system within a shipping container.
- Integrated an Arduino Opta with 8 RS-485 sensors, automating heater, humidifiers and water refilling via relay control.
- Designed an 80/20 fixture for two docks in NX, validating its maximum capacity of 400 lbs with FEA in NX.
- Developed multi-threaded C++ firmware for real-time control of system via Modbus and a Python dashboard for data visualization; tuning duty cycles and tolerances to maintain 65 °C and 85% RH for 30 days.
- Designed a CNC'd vibration fixture for the EV3 Zip Battery and Bus Bars in NX, validating its stiffness and tuning its frequency by performing Modal Analysis in NX while applying DFMA.
- Designed 4 modular electronic test fixtures in NX to facilitate plug-and-play validation of power and control boards, enabling accelerated EOL testing for the Powertrain & Battery team.

Sensor Hardware Engineering Intern — May 2025 – Aug. 2025

Kodiak Robotics — *Mountain View, CA*

- Designed and prototyped a liquid and air sensor cleaning system with 12+ nozzles, optimizing pressure and angle for LIDAR, WFOV, and NFOV cameras — ensuring reliable perception for fully autonomous trucks.
- Designed and brought up a modular sensor cleaning test bench, integrating an in-house PCB with Python and C++ automation scripts to enable repeatable, plug-and-play validation across multiple sensors, reducing setup time by 70%.
- Modified and integrated a sheet metal enclosure in SolidWorks to house pneumatics for the air cleaning system, applying DFA principles to reduce on-road troubleshooting time by 30% and personally mounting the full assembly onto the truck.
- Validated full cleaning system performance by capturing synchronized images and LiDAR PCAPs during operation, quantifying cleaning effectiveness across all relevant sensors.

Mechatronics Engineering Intern — Sep. 2024 – Dec. 2024

Sheartak Tools Ltd. — *Waterloo, ON*

- 3D modelled 10+ spiral cutterheads in SolidWorks, drafting technical drawings using GD&T to specify critical tolerances.
- Developed Python scripts with OpenPyXL and NumPy, automating the migration of 500+ products, saving 30+ hours.
- Performed 6 installations on planers and jointers in less than 7 hours, installing 50+ carbide blades per cutterhead.
- Optimized the cutterhead installation time of 20+ customers by drafting 5 detailed installation manuals.

Leadership

Hardware Director & Founder — Dec. 2025 – Present

Waterloo Automation Collective — *Waterloo, ON*

- Leading all hardware and software development of UWaterloo's first injection molder. Running meetings, design reviews and mentoring 15+ students.
- Owning master-model of injection molder in OnShape, overseeing and modelling frame and injection unit assemblies.
- Leading in-house PCB development in Altium, prioritizing DFMA, cost optimization and performance.

Mechanical Lead & Designer — Aug. 2024 – Dec. 2025

Waterloo Aerial Robotics Group — *Waterloo, ON*

- Co-led the mechanical team ahead of the 2026 competition, owning and managing the Task 1 Payload within the Hexacopter assembly. Leading meetings, design reviews and mentoring 15+ students.
- Led the design of the drone's landing gear in SolidWorks for the 2025 competition, angling its legs to ensure concentricity with bucket for water retrieval; implementing depth limiters, anti-tipping bars and carbon fiber members.

Education

University of Waterloo — Sep. 2023 – Apr. 2028

Candidate for a Bachelor of Applied Science in Mechatronics Engineering — *Waterloo, ON*

Relevant Coursework: Sensors & Instrumentation, Mechanics of Materials, Data Structures and Algorithms, Materials Science

Camilo Artigas

(647) 836-0531 | cartigas@uwaterloo.ca

Dual Canadian & US Citizen

Website | LinkedIn | GitHub

6-DOF Robotic Arm | *SolidWorks, Altium, Power Electronics, ROS, PID Control, Systems Integration*

Designing a 6-DOF Robotic Arm capable of a 3 kg payload, integrating my own gearboxes, stepper motors, machined parts and inverse kinematics. Projected to begin manufacturing in Oct 2025.

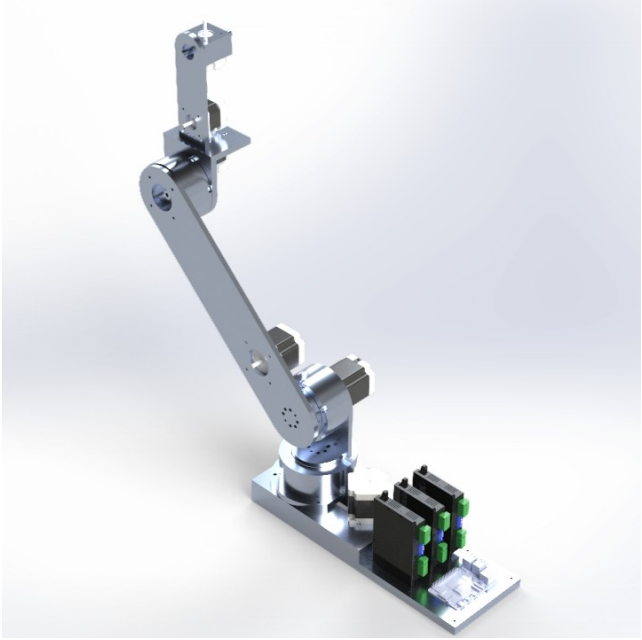

SolidWorks Model

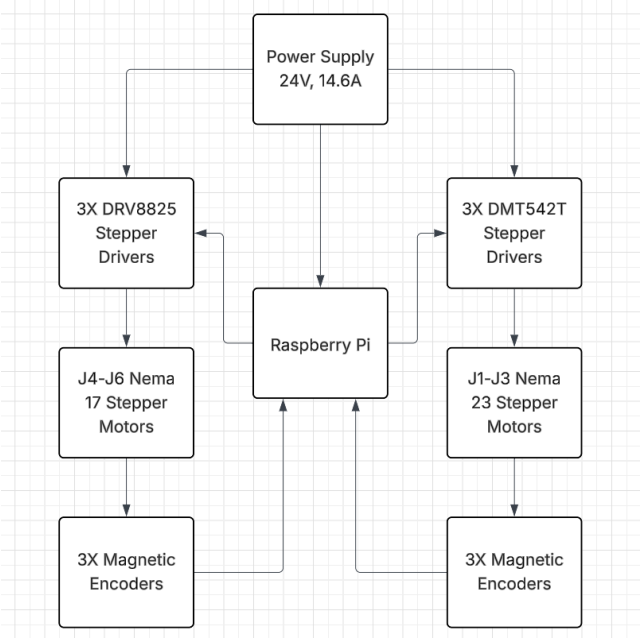

High Level Architecture

Sensor Cleaning @ Kodiak | *SolidWorks, Python, Systems Integration, Test Engineering, Pneumatics*

Designed and prototyped a liquid and air sensor cleaning system optimizing pressure and angle for a LiDAR and WFOV/NFOV cameras. Actuated it by bringing up a modular sensor cleaning test bench, integrating an in-house PCB with Python and C++ automation scripts. Validated full system by capturing synchronized images and LiDAR PCAPs during operation.

Kodiak Commercial Sensor Pod Assembly

Sensors in cleaning system: WFOV, NFOV Cameras and OT-128 LiDAR

Camilo Artigas

(647) 836-0531 | cartigas@uwaterloo.ca

Dual Canadian & US Citizen

Website | LinkedIn | GitHub

Cycloidal Actuator | *SolidWorks, 3D Printing, DFMA, Python, Stepper Motors*

Designed a 130+ part assembly achieving a gear ratio of 23:1 using a cycloidal speed reducer. Developed a Python script for instant visualization of the cycloid, reducing design time by 50%. Successfully 3D printed a backlash-free prototype. (Code)

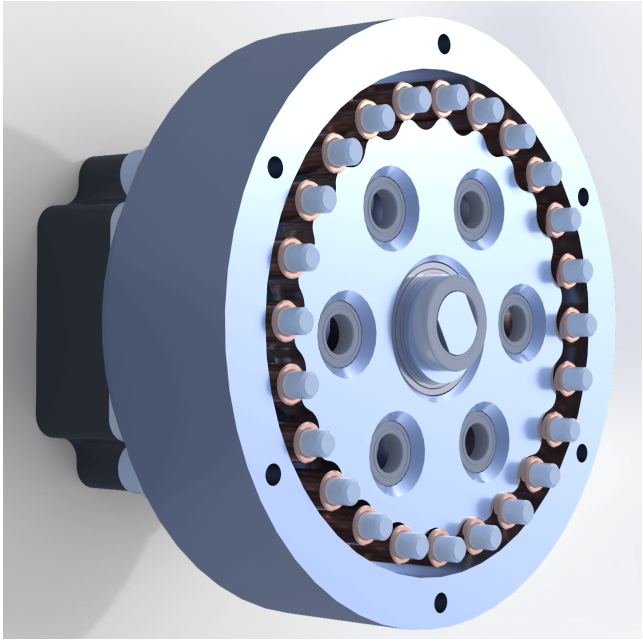

SolidWorks Model

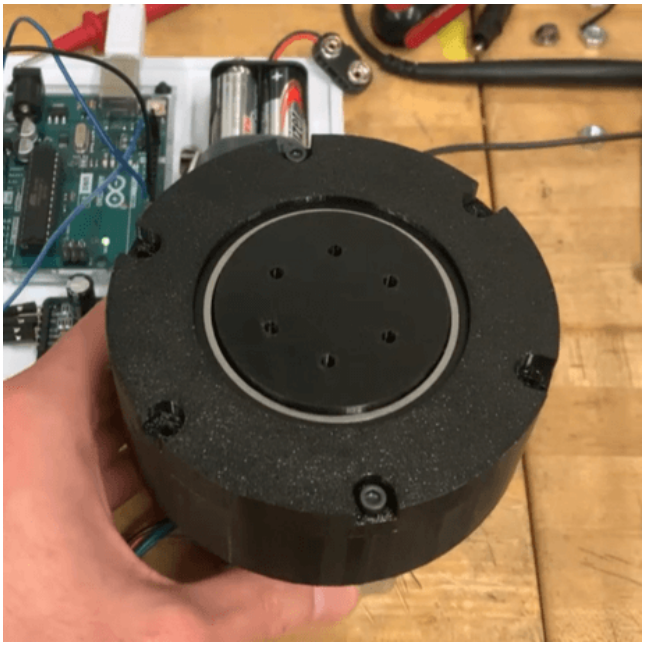

Functional Prototype → WATCH HERE

Infinite Sustain Guitar Pedal | *Altium, LT Spice, Signal Processing, Simulation*

Designed an infinite sustain guitar pedal, using 6 different stages of amplification and signal processing. Achieving infinite sustain (with threshold) for a plucked note. Currently working on the PCB and mechanical enclosure.

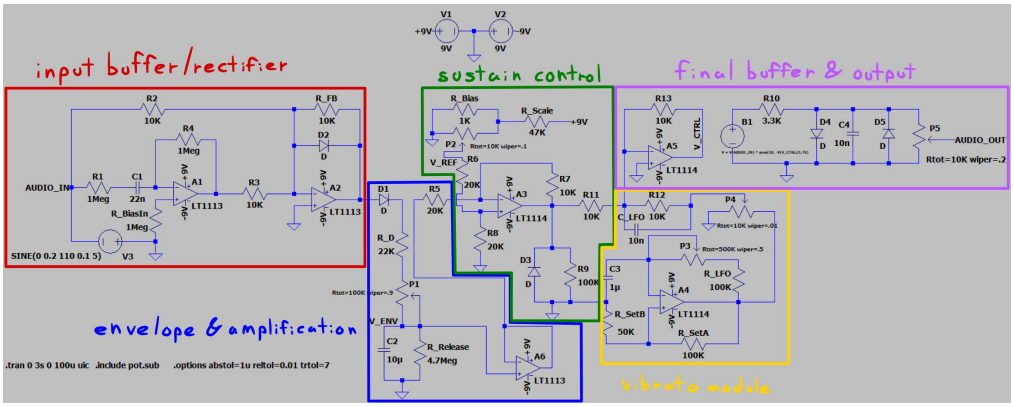

LT Spice Schematic

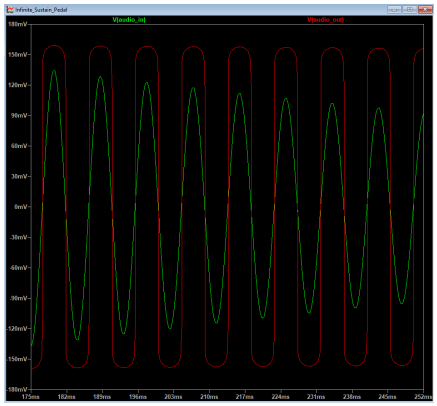

LT Spice Simulation
[Input → Green, Output → Red]

Camilo Artigas

(647) 836-0531 | cartigas@uwaterloo.ca

Dual Canadian & US Citizen

Website | LinkedIn | GitHub

3-DOF Robotic Arm | *SolidWorks, 3D Printing, DFMA, Python, C++, UART, Servo Motors*

Designed and programmed a robotic arm by deriving its inverse kinematics, achieving smooth movement along the x, y, and z axes using servo motors. Established serial communication between a Python GUI and Arduino IDE for precise control. (Code)

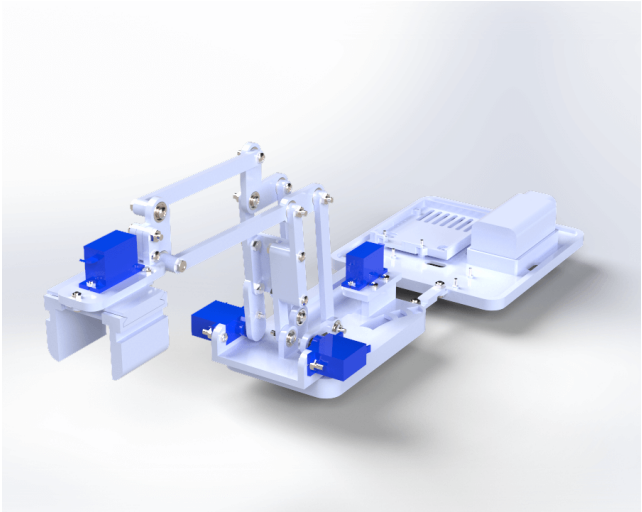

SolidWorks Model

Robotic Arm Controlled with GUI → WATCH HERE

Angled Landing Gear @ WARG | *SolidWorks, Test Engineering, Parametric Modelling*

Designed landing gear tailored towards WARG's competition challenge: water retrieval by landing on a barrel. Implemented parametric modelling, saving 10 hours. Added key features such as: optimal angle, anti-tipping bars and depth limiters. The landing gear was successful every time it was tested.

SolidWorks Overview

Landing Gear in Action → WATCH HERE

Camilo Artigas

(647) 836-0531 | cartigas@uwaterloo.ca

Dual Canadian & US Citizen

Website | LinkedIn | GitHub

Product Design @ Sheartak | *SolidWorks, GD&T, Parametric Modelling*

During my internship at Sheartak, I had the opportunity to model several spiral cutterheads, creating their engineering drawings while capturing key features and tolerances.

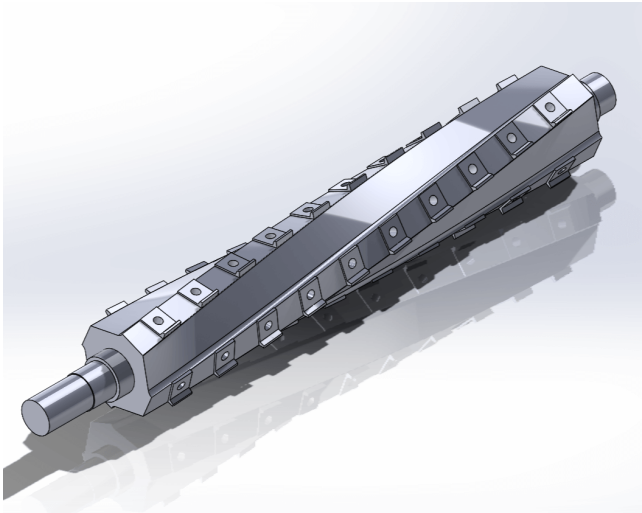

Spiral Cutterhead Solidworks Model

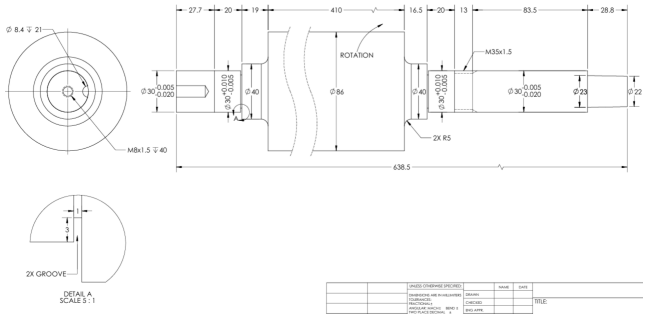

Engineering Drawing

Autonomous Plant Watering Robot | *SolidWorks, 3D Printing, C++, Hydraulics, Systems Integration*

Designed a 3D-printed peristaltic pump with 20% occlusion, capable of watering 6 plants in under a minute. Built a rack-and-pinion mechanism to convert rotational motion into linear movement for lifting hoses. Achieved full autonomy by integrating an ultrasonic sensor, motor encoders, and C++ scripts.

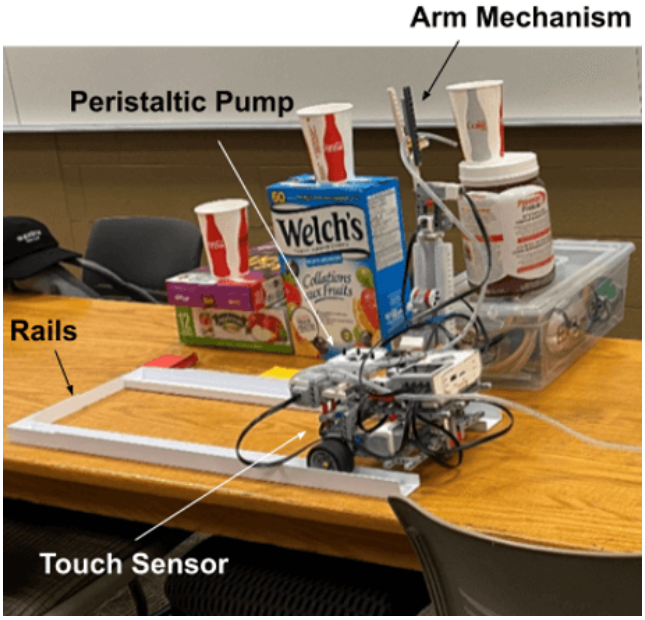

Robot Watering Plant

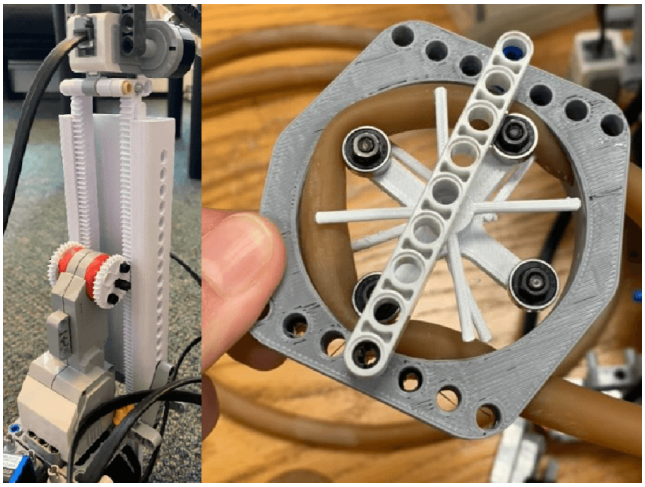

Rack and Pinion Mechanism & Peristaltic Pump