ME14 Team 2
Transmission Design CDR

Mohammad Arbab
Luis Calyeca
Camilo Garrido
Sebastian Banuelos
Enzo Celis

Five Guys

DESIGN OVERVIEW

Gear Ratios

Stage 1

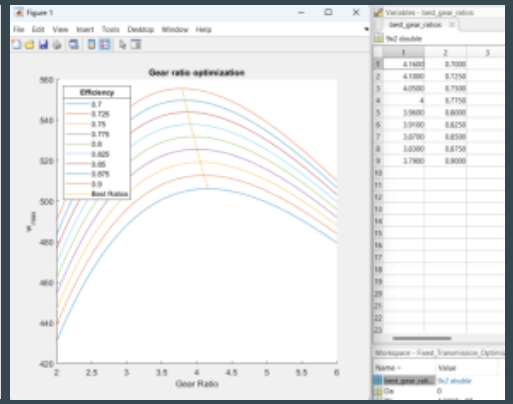

Stage 2

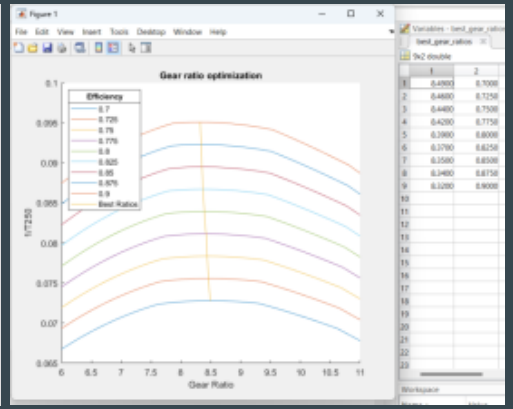

- To maximize our score, we are going with a two-stage transmission.
  - One stage will be optimized to achieve the fastest time to 250 RPM
  - The second stage will be optimized to achieve the highest top speed.
- Using the Matlab script, we found that the optimal gear ratios for the first and second stages are around 8.5:1 and 4:1 respectively.
  - While selecting from the available gears, we found that it was much more practical to settle a gear ratio of 8:1 for the first stage

Simple Transmission Diagram

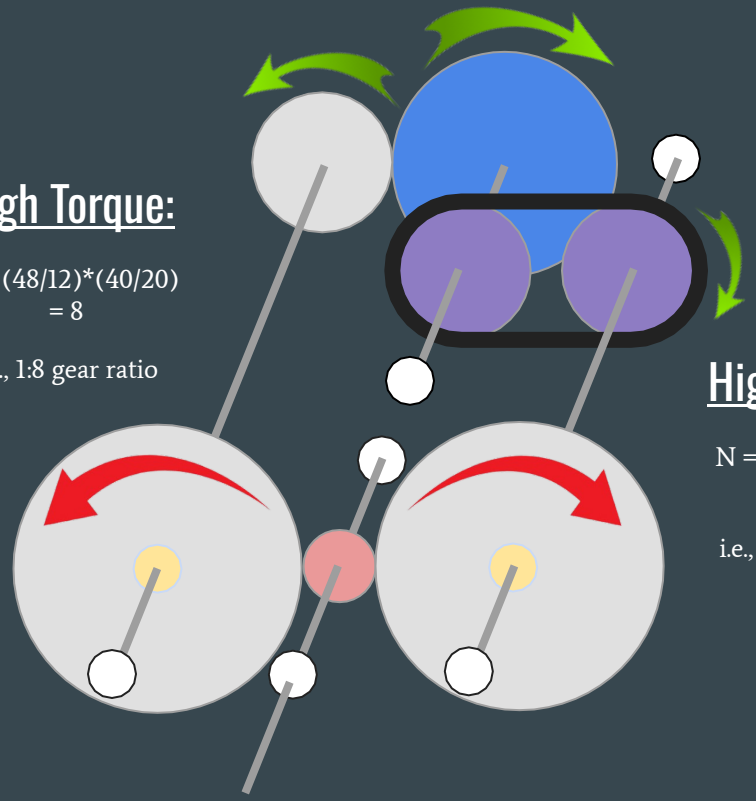

High Torque:

N = (48/12)*(40/20)
= 8

i.e., 1:8 gear ratio

High Speed:

N = (48/12)*(1/1)
= 4

i.e., 1:4 gear ratio

Legend

- Gears
  - Constant Direction
- Input gear
- Output Gear
- Bearings (two not pictured)
- Shafts
- One-Directional Bearings
  - Engaged Direction
- Timing Pulleys
- Timing Belt

Note: Pulleys & gears are relatively very close to scale, but nothing else is.
(Walls not pictured)

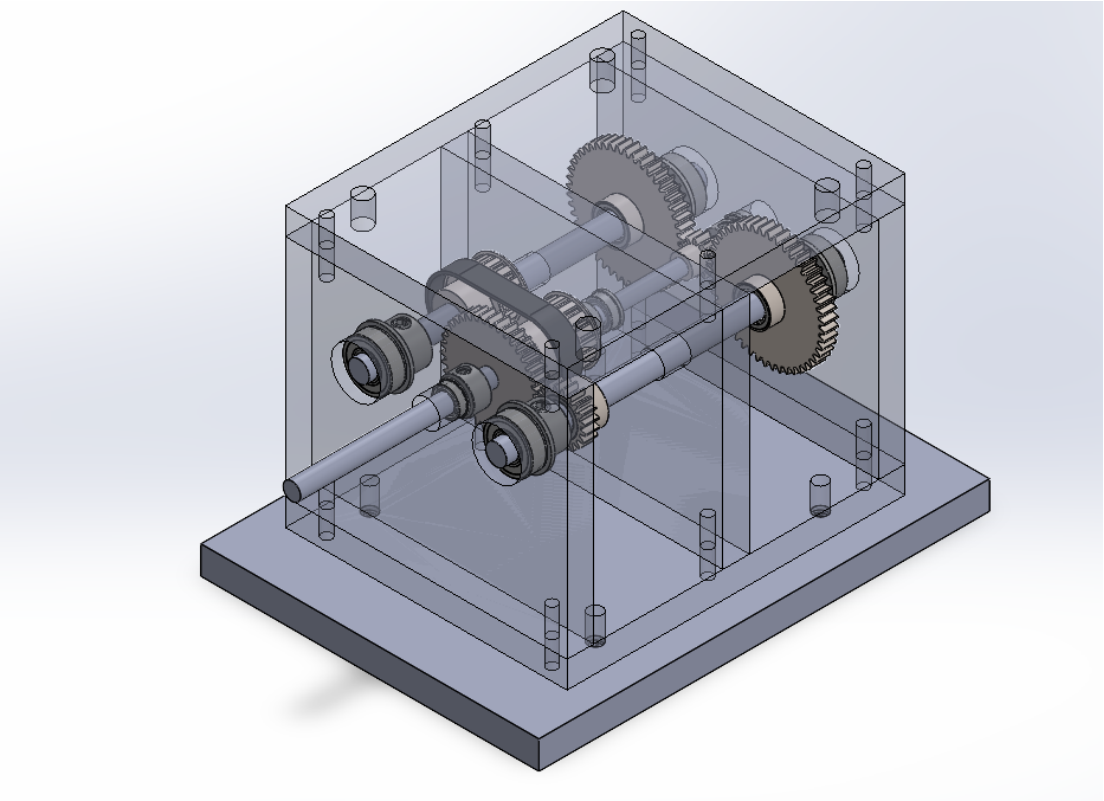

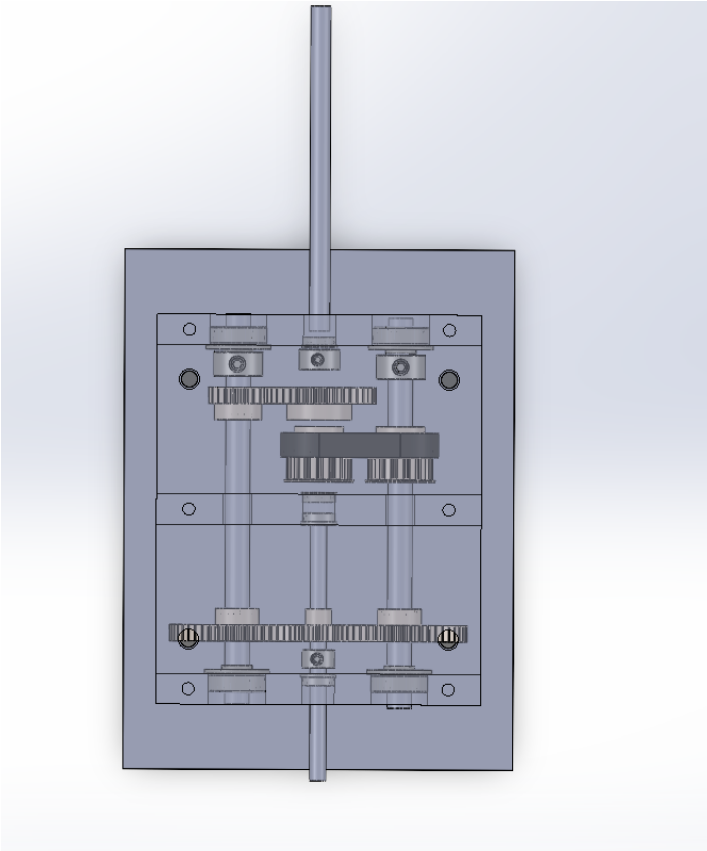

Finalized CAD

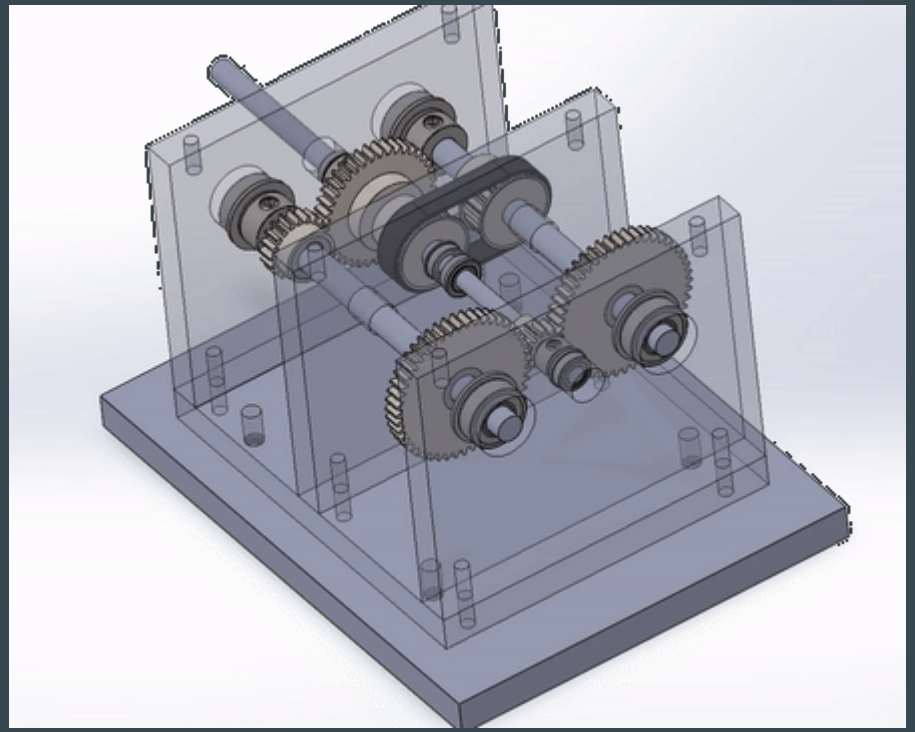

High Torque

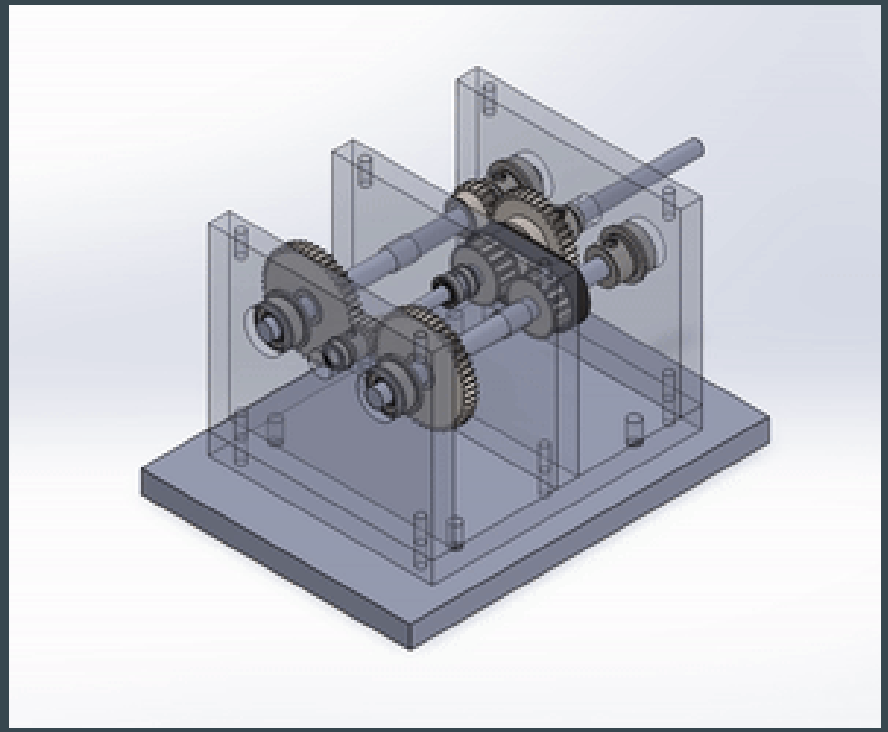

High Speed

Switching Motor Direction

- Still using H-Bridge Setup for switching motor polarity
- Now using a 3-position DPDT to include an “off” state at the start of each operation

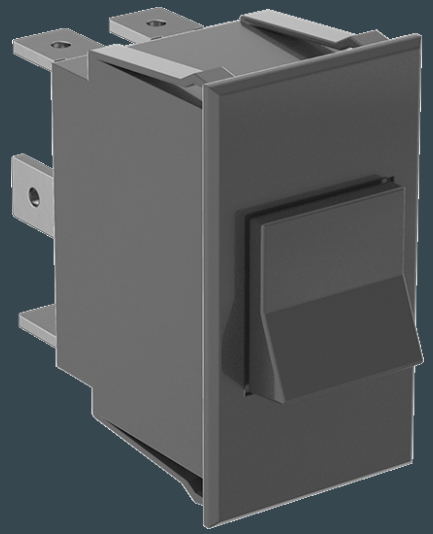

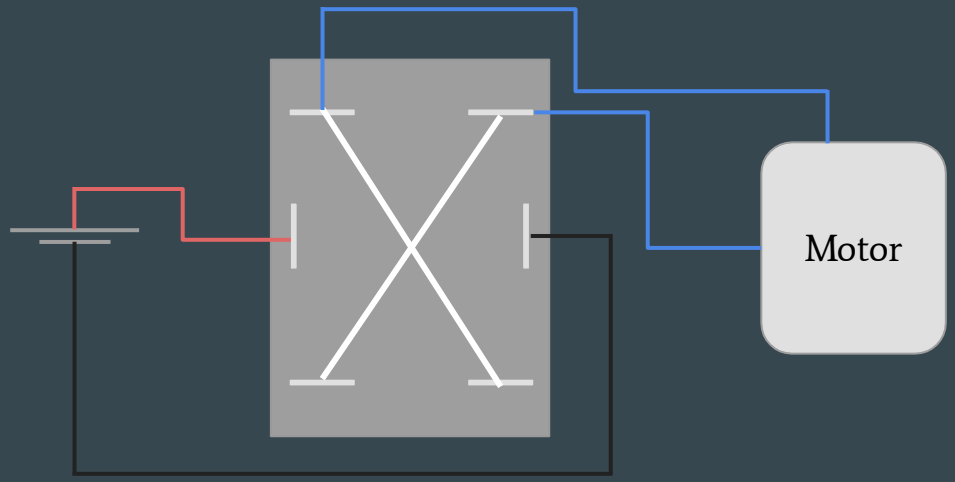

Key Dimensions

Key Dimensions (One-Directional Bearings)

Bearing

- Smoothness requirement: 16 µin
- Shaft mount type: Press Fit
  - Corresponds to a shaft diameter range of ~0.3745” - 0.375”
- Hardness requirement: at least HRC58
- Housing bore size (i.e., gear bore size): 0.6245”-0.6255”
  - We can drill/ream a ⅝” hole in the press-fitted gears to satisfy this requirement.

Selected Shaft

- Smoothness: 10 µin
- Diameter: ⅜”
  - Tolerance: -0.001” to 0”
  - We are ordering 3, and will use the closest one to desired spec.
- Hardness: HRC60
  - Nitride Coating
- Straightness Tolerance: 0.003” per ft.

Key Dimensions (Bearing - Housing Fit)

- We determined that a **P7/h6 Interference Fit** was necessary to ensure the bearings remain secured inside the housing walls without exerting excessive radial stress on the bearings and acrylic.
- Furthermore, we have selected **flanged bearings** to ensure they lay flat against the surface of the housing to reduce shaft misalignment.

	Diameter (Upper Limit)	Diameter (Lower Limit)
5/16” Bearing	0.5000” (OD)	
Housing	0.5000”	0.4995”
1/4" Bearing	0.5000” (OD)	
Housing	0.5000”	0.4995”

Key Dimensions (Bearing - Shaft Fit)

- We determined that, for securing the shafts to the bearings, a **K7/h6 Transition Fit** was the best compromise between minimizing slippage in the axial direction, reducing wobble, and preventing frictional losses while still allowing us to quickly make modifications to the transmission if needed (e.g., if we fall back on the contingency plan).

	Diameter (Upper Limit)	Diameter (Lower Limit)
5/16” Bearing	0.3125”	
Shaft	0.3125”	0.3121”
1/4" Bearing	0.2500”	
Shaft	0.2500”	0.2496”

- Note: We will lathe the ends (~0.5” in length) of our 3/8" shafts down to be within these tolerances for the shaft sizes

Stress Analysis

Gear Shear Strength

- Point of concern from the PDR was gear teeth shearing
- Wrote MATLAB script that automates computation of max torque on gear, tangential force, and shear stress on gear/tooth intersection area
- Compared to Acetal average shear strength of 6.9 kpsi

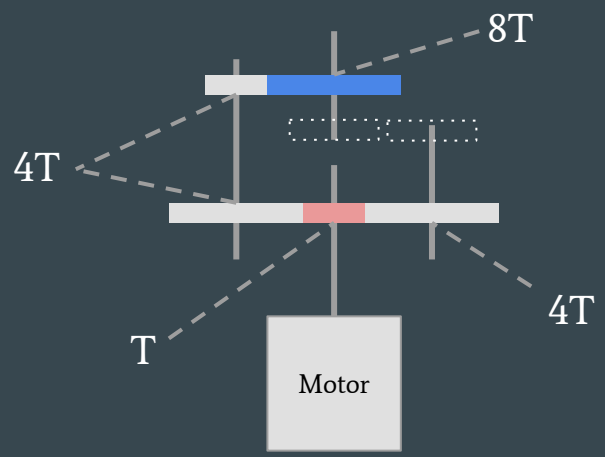

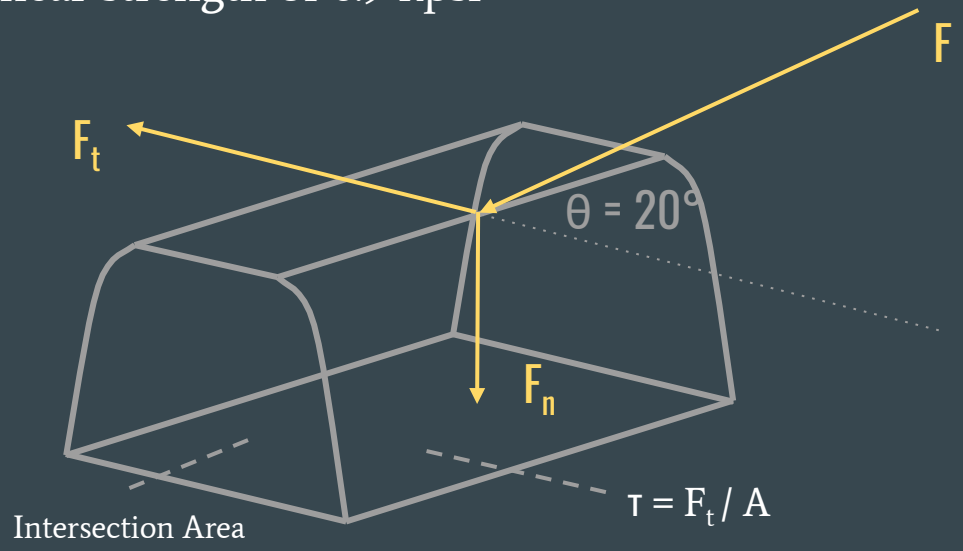

Gear Shear Strength

- Results concluded that the gears should safely handle shear stresses, clearing Acetal's shear strength by a factor of safety of at least **2** in a worst case stall torque scenario

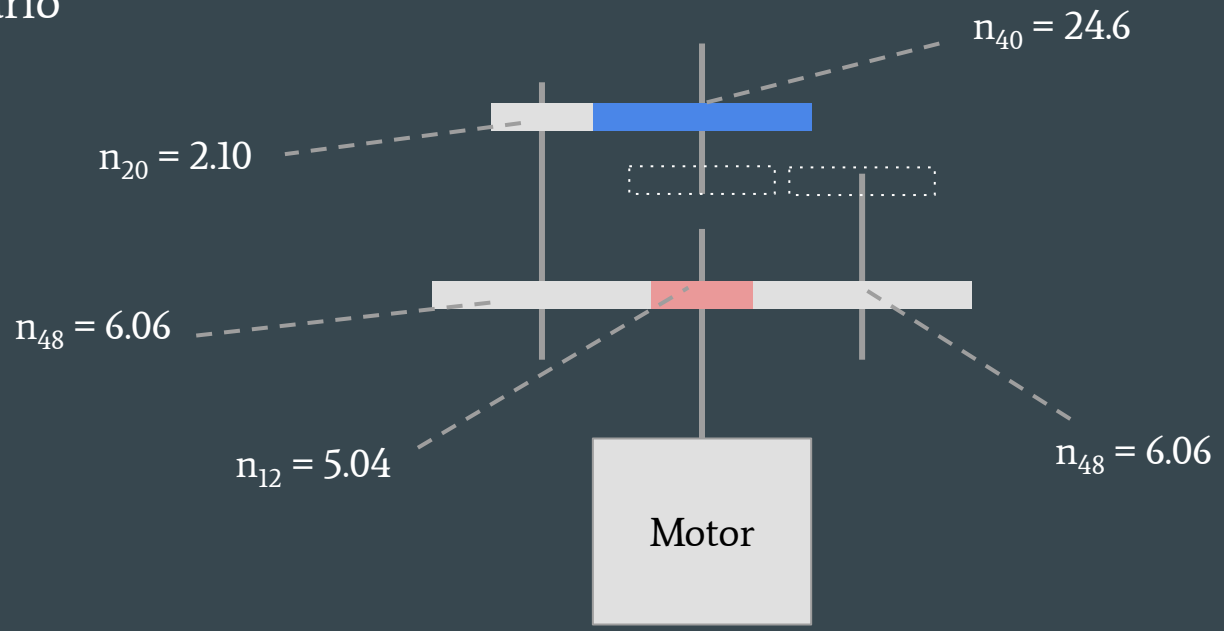

Shaft Torsional Strength

- Similarly, we were concerned about shear stress on the shafts, especially the Aluminum output
- Computer shear stresses to get shaft principal stresses and found von Mises Stress to get factor of safety for each shaft given its dimension and material

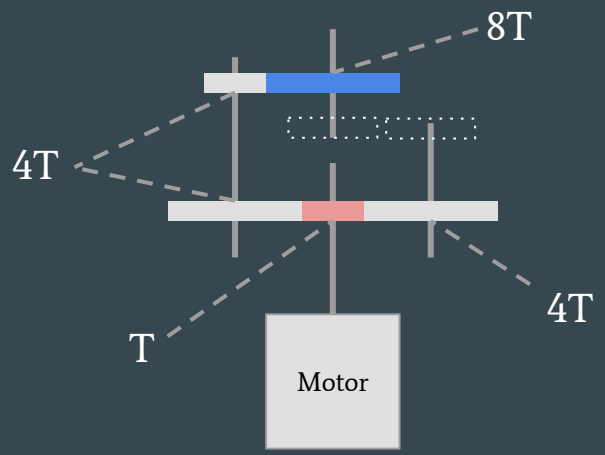

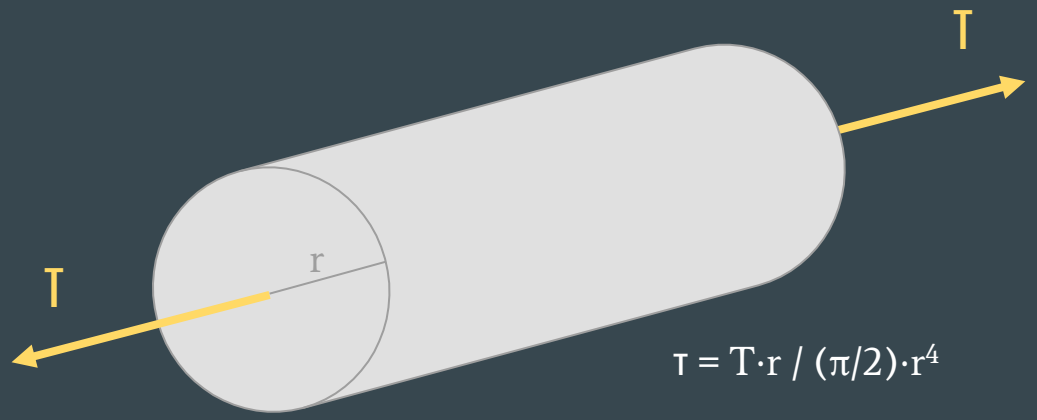

$\tau = T \cdot r \,/\, (\pi/2) \cdot r^4$

Shaft Torsional Strength

- Results concluded that all the shafts should safely handle worst case stall torque scenarios with a safety of factor of at least **3.5**

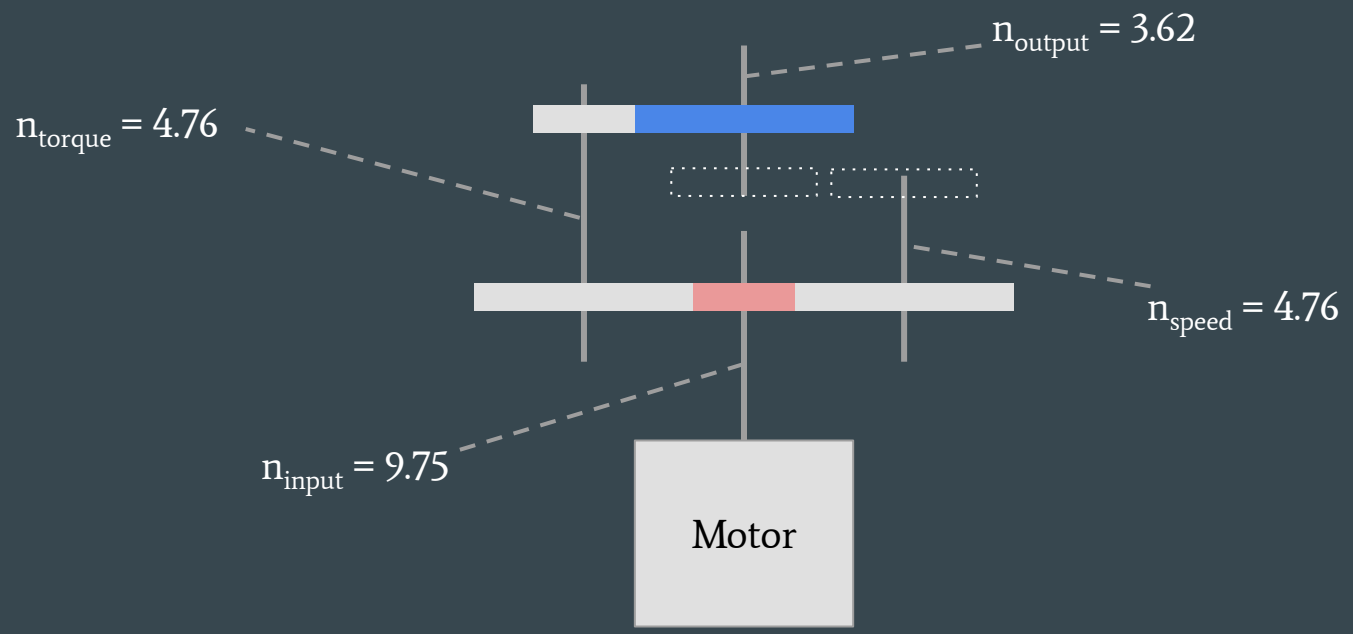

Strengths and Weaknesses

Strengths

- Potential: Two different gear ratios allow us to achieve higher speeds and higher torques to maximize our potential score for the competition
- Higher Torque → Better Acceleration (Faster time to 250 rpm) → Change Transmission Speed → Higher Speed

$$S = \frac{\dot{\theta}}{T}$$

$\dot{\theta}$ ← Max rpm (maximized by second speed)

T ← Time to 250 rpm (minimized by first speed)

Weaknesses

- Assembly: Multiple components and additional machining creates greater margin for error
- Efficiency: More moving components means more mass and more avenues for frictional losses
  - According to these resources (1, 2) spur gears have an efficiency of 94%-98.5% and belt pulley systems have an efficiency of 92%-97%

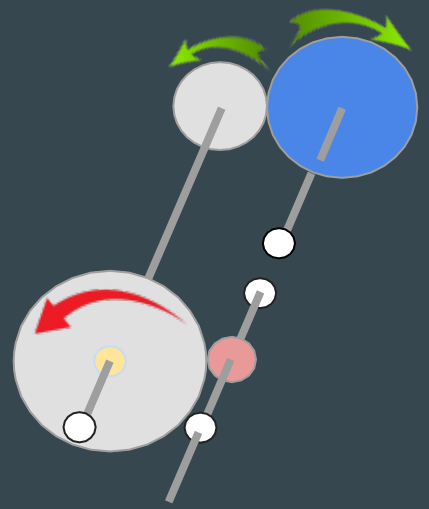

<u>One Speed Transmission</u>
Efficiency: (0.94)(0.94) = 0.8836 → 88.36%

<u>Two Speed Transmission</u>
Efficiency:
(0.94)(0.94)(0.94)(0.92) ~ 0.7641→ 76.41%

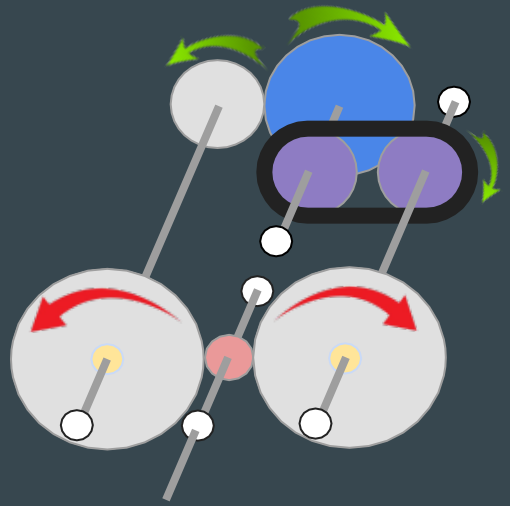

BOM and Timeline

Bill Of Materials

1	Item	Qty	Price	Total	Source	Half-Priced
2	Rocker Switch	1	$12.50	$12.50	https://www.mcmaster.com/7395K61/	
3	12 Tooth Gear	2	$3.54	$7.08	https://shop.sdp-si.com/a-1m-2-y24012.html	
4	48 Tooth Gear	2	$4.33	$8.66	https://shop.sdp-si.com/a-1m-2-y24048.html	
5	20 Tooth Gear	2	$3.84	$7.68	https://shop.sdp-si.com/a-1m-2-y24020.html	
6	40 Tooth Gear	2	$4.16	$8.32	https://shop.sdp-si.com/a-1m-2-y24040.html	
7	24 Tooth Gear	1	$3.91	$3.91	https://shop.sdp-si.com/a-1m-2-y24024.html	
8	36 Tooth Gear	1	$4.10	$4.10	https://shop.sdp-si.com/a-1m-2-y24036.html	
9	Belt Pulleys	2	$14.59	$29.18	https://shop.sdp-si.com/a-6a-3-15df03712.html	
10	Belts	1	$6.60	$6.60	https://shop.sdp-si.com/a-6r-3-028037.html	
11	One Way Bearings	2	$13.09	$26.18	https://www.mcmaster.com/2489K23/	
12	3/8" Shaft Clamping Collars	2	$6.00	$12.00	https://www.mcmaster.com/6436k13/	
13	3/8 Nitride-Coated Steel Shaft (12 in)	3	$7.36	$22.08	https://www.mcmaster.com/5936K62/	
14						
15	MATERIALS FROM LAB					
16	5/16" Open Wall Bearings	4	$3.34	$13.36	Closest Equivalent: https://www.mcmaster.com	
17	5/16" Shielded Wall Bearings	2	$3.34	$6.68	Closest Equivalent: https://www.mcmaster.com	
18	1/4" Wall Bearings	2	$2.85	$5.70	https://www.mcmaster.com/57155K323/	
19	3/8" Shaft Collars (Black-Oxide)	3	$1.01	$3.03	https://www.mcmaster.com/9414T8/	
20	3/8" Shaft Collars (Zinc-Plated)	4	$1.11	$4.44		
21	5/16" Shaft Collars	2	$0.91	$1.82	https://www.mcmaster.com/9414T7/	
22	1/4" Shaft Collars	2	$0.89	$1.78	https://www.mcmaster.com/9414T6/	
23	1/4" D Shaft (6 in.)	1	$3.92	$3.92	https://www.mcmaster.com/1327K72/	
24	3/8" Keyed Shaft (6 in.)	1	Provided	$0.00	Provided Materials	
25	12 mm Acylic Sheet	6 x 24 in.	Provided	$0.00	Provided Materials	
26	10-32 Screws	16	Provided	$0.00	Provided Materials	
27	Set screws	10	Token Fee	$2.00	Shop Materials	
28	Washers	2	Token Fee	$0.25	Shop Materials	
29	Wiring		Token fee	$1.00	Shop Materials	
30	Loc-Tite	minimal (if any)	Token Fee	$1.00	Shop Materials	
31						
32	Total			$193.27		

Timeline

Milestones/Tasks:	Time Window/Date	5/6	5/7	5/8	5/9	5/10	5/11	5/12	5/13	5/14	5/15	5/16	5/17	5/18	5/19	5/20	5/21	5/22	5/23
Preliminary Design Phase																			
Preliminary Brainstomring	5/6 - 5/7																		
High-Level Design Decision	5/7																		
Finalize Gear Ratio	5/8																		
Finalize Gear Dimensions	5/8																		
Finalize Pulley System Dimensions	5/8																		
Determine Electric Setup	5/8																		
Make Preliminary CAD	5/8																		
Make PDR Presentation	5/8																		
Preliminary Design Review	5/9																		
Critical Design Phase	5/10 - 5/14																		
Check Shop for Supplies	5/10																		
Dimension Hole Tolerances	5/11																		
Revisit/Finalize H Bridge Setup	5/11																		
Modify/Finalize Housing Dimensions	5/11 - 5/12																		
Finalize BOM	5/13																		
Finalize CAD	5/13																		
Make Gear/Shaft Stress Analysis Code	5/11 - 5/12																		
Make CDR Presentation	5/11 - 5/13																		
Finalize Dimensions/Material from Analysis	5/13																		
Critical Design Review	5/14																		
Submit Final BOM	5/14																		

*Subject to Adjustment

Timeline

Milestones/Tasks:	Time Window/Date
Fabrication/Assembly Phase	5/15 - 5/21
Machine Base Plate	5/15
Machine Vertical Plates	5/15
Drill Bolt Pattern on Base Plate	5/15
Drill Mounting Holes on Vertical Plates	5/15
Machine Shafts to Proper Diameters	5/15
Predrill Bearing Holes on Vertical Plates	5/16
Ream Holes on Vertical Plates	5/16
Make Wires with Alligator Clips	5/16
Expect McMaster Order to Arrive	5/16
Expect SDP/SI Order to Arrive	5/17
Press Fit Bearings Into Vertical Plates	5/17
Wire/Solder H-Bridge Switch	5/17
Drill out Gear Bores	5/17
Ream Gear Bores	5/17
Attach Gears to Shafts	5/20
Secure Shaft Collars	5/20
Assemble Shafts onto Bearings	5/20
Secure Vertical Plates to Base Plate	5/20
Finalize Assembly	5/21
Testing Phase	5/21 - 5/22
Test Fit Housing on Apparatus	5/21
Test H-Bridge (Without Transmission)	5/21
Test Fit Motor to Input Connection	5/21
Test Run for Estimated Speed	5/21
Test Run for Estimated Torque	5/21
Debug (as needed)	5/21 - 5/22
Final Delivery	5/23
Competition Date	5/23

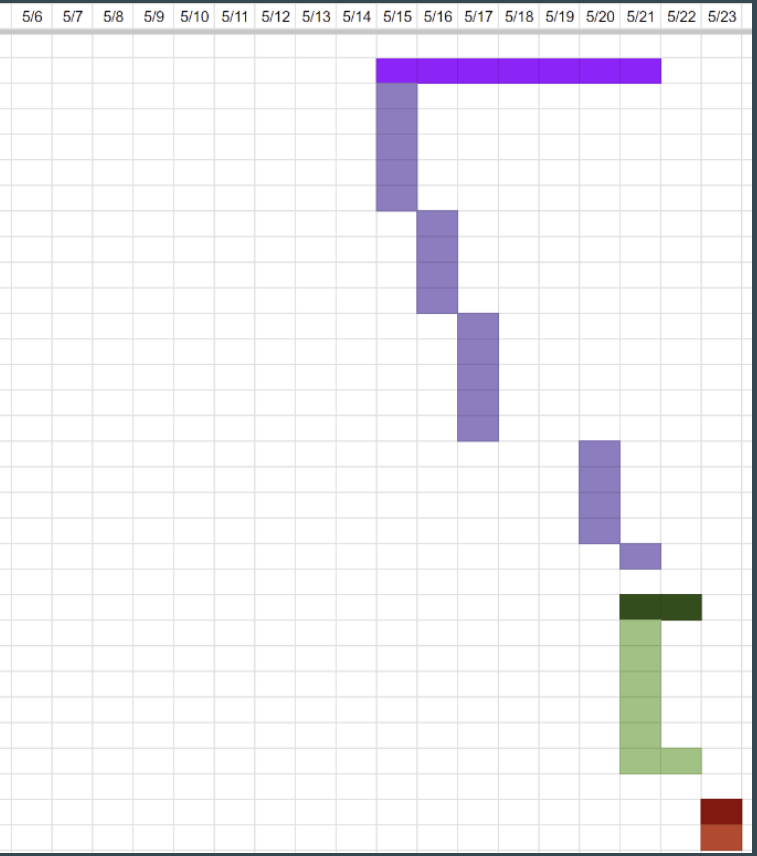

*Subject to Adjustment

Thank You
Questions?

...

Backup Slides

...

Design Decisions

Why have a pulley system and not a spur gear for one of the shafts?

- Our design constraints (matching output directionality, desired gear ratios, and collinearity of input and output shaft) were incompatible without 2 additional idler gears.

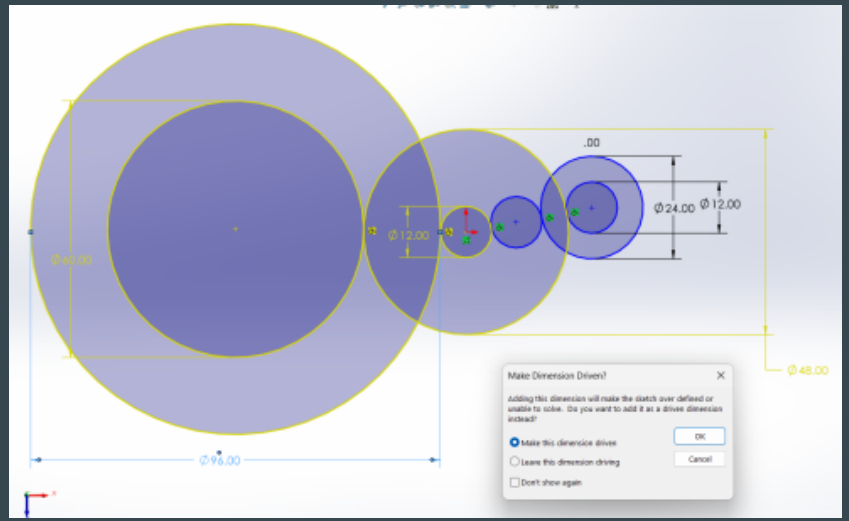

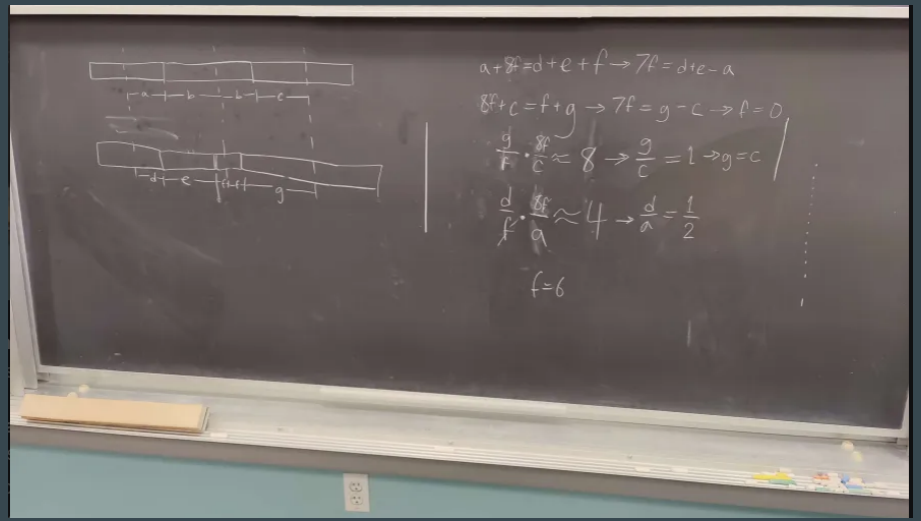

Gear Ratio Optimization for Contingency Plan

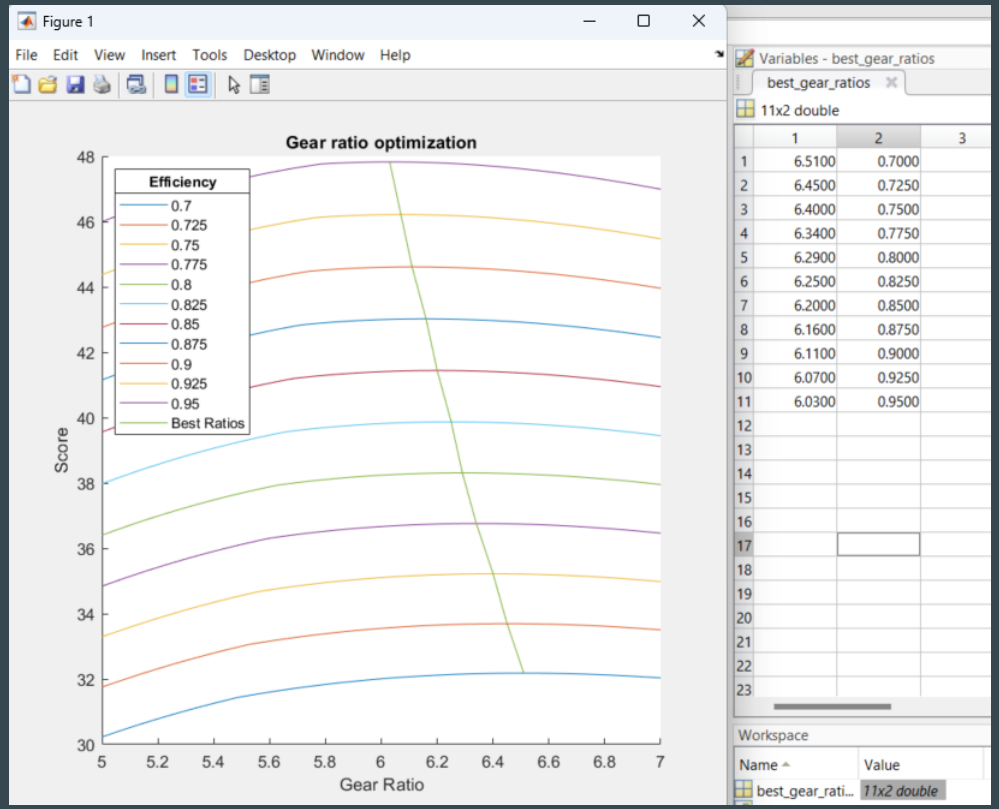

	1	2	3
1	6.5100	0.7000	
2	6.4500	0.7250	
3	6.4000	0.7500	
4	6.3400	0.7750	
5	6.2900	0.8000	
6	6.2500	0.8250	
7	6.2000	0.8500	
8	6.1600	0.8750	
9	6.1100	0.9000	
10	6.0700	0.9250	
11	6.0300	0.9500	

One-Way Bearing Mechanism

- In order to transition between gear ratios, we will implement one-way locking clutch bearings.
- When the shaft spins in one direction, internal needles lock the housing in place, making it rotate along.
- However, when it spins in the opposite direction, the internal needles unlock, allowing the housing to slip.

Contingency Plan (Single-Stage Transmission)

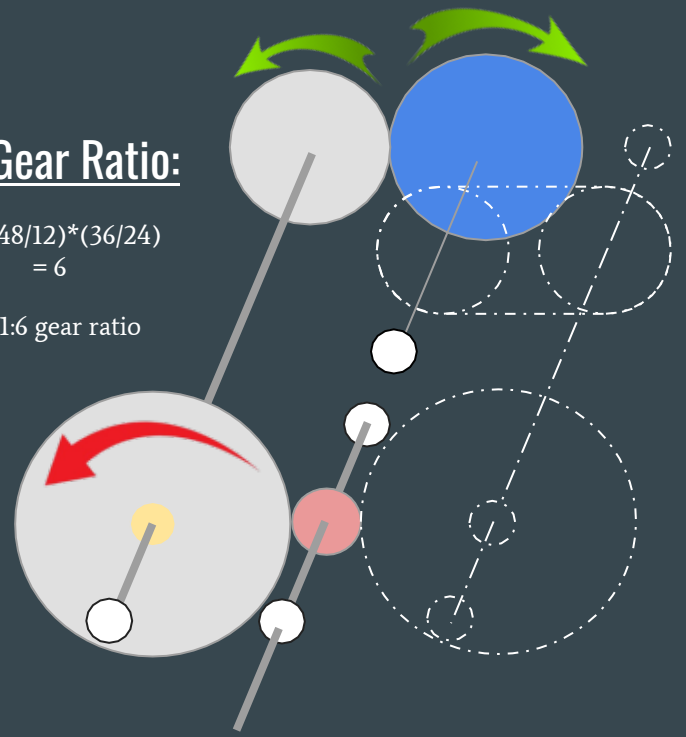

Set Gear Ratio:

N = (48/12)*(36/24)
= 6

i.e., 1:6 gear ratio

Note: Pulleys & gears are relatively very close to scale, but nothing else is.
(Walls not pictured)

- Disengage the speed-focused side of our 2-stage transmission — just a matter of loosening set screws and sliding elements out.
  - The dashed white elements in the diagram cease to play a role in the transmission.
- Change the gear ratio on the output end from 20:40 to 24:36.
  - Preserves shaft/bearing geometry
- Test this classic, 1:6 gear ratio, 4-spur gear transmission versus our two-stage transmission to see which yields a higher score.

MATLAB Code – Gear Shear Stress

```
% get force components at gear interface due to torque gear is experiencing
function [F_n, F_t] = getForces(torque, D)
    r = D/2;
    F_t = torque/r;
    F_n = F_t*tand(20);
    F_t = -1 * F_t;
    % Note that in order to make the bending stress compressive in other
    % calculations, the tangent force is negated here for simplicity
end

% other code for just getting the shear stress at the base of the gear
% tooth that meets the rest of the gear
function tau_base = getBaseShear(w, t, F_t)
    tau_base = -1 * F_t/(w*t);
end

% get FoS due to shear at the tooth base/interface with the gear
function FoS_base_shear = get_FoS_base_shear(tau, tau_shear)
    FoS_base_shear = tau_shear/tau;
end
```

```
twelve_tooth_base = 5.0395

forty_eight_tooth_base = 6.0591

twenty_tooth_base = 2.0990

forty_tooth_base = 24.6341
```

MATLAB Code – Shaft Torsional Stress

```
% code for analyzing the strengths of the shafts

% get shear stress on shaft given torque and shaft radius
function torsion_shear = torsion_shear_formula(torque, radius)
    torsion_shear = (torque * radius) / (((pi)/2) * (radius)^4);
end

% get FoS from von Mises failure criteria
function FoS = vonMises(sigma_A, sigma_B, sigma_yield)
    sigma_prime = ((sigma_A)^2 - (sigma_A)*(sigma_B) + (sigma_B)^2)^(1/2);
    FoS = sigma_yield/sigma_prime;
end

% get FoS against shaft failure due to torsion
function FoS_Shaft = testShaft(torque, diameter, sigma_yield)
    radius = diameter/2;
    torsion_shear = torsion_shear_formula(torque, radius);
    [principal_torsion_A, principal_torsion_B] = principalStresses(0, torsion_shear);
    FoS_Shaft = vonMises(principal_torsion_A, principal_torsion_B, sigma_yield);
end
```

```
input_shaft = 9.7491
torque_shaft = 4.7603
speed_shaft = 4.7603
output_shaft = 3.6184
```

CAD with High Torque Gear Motion

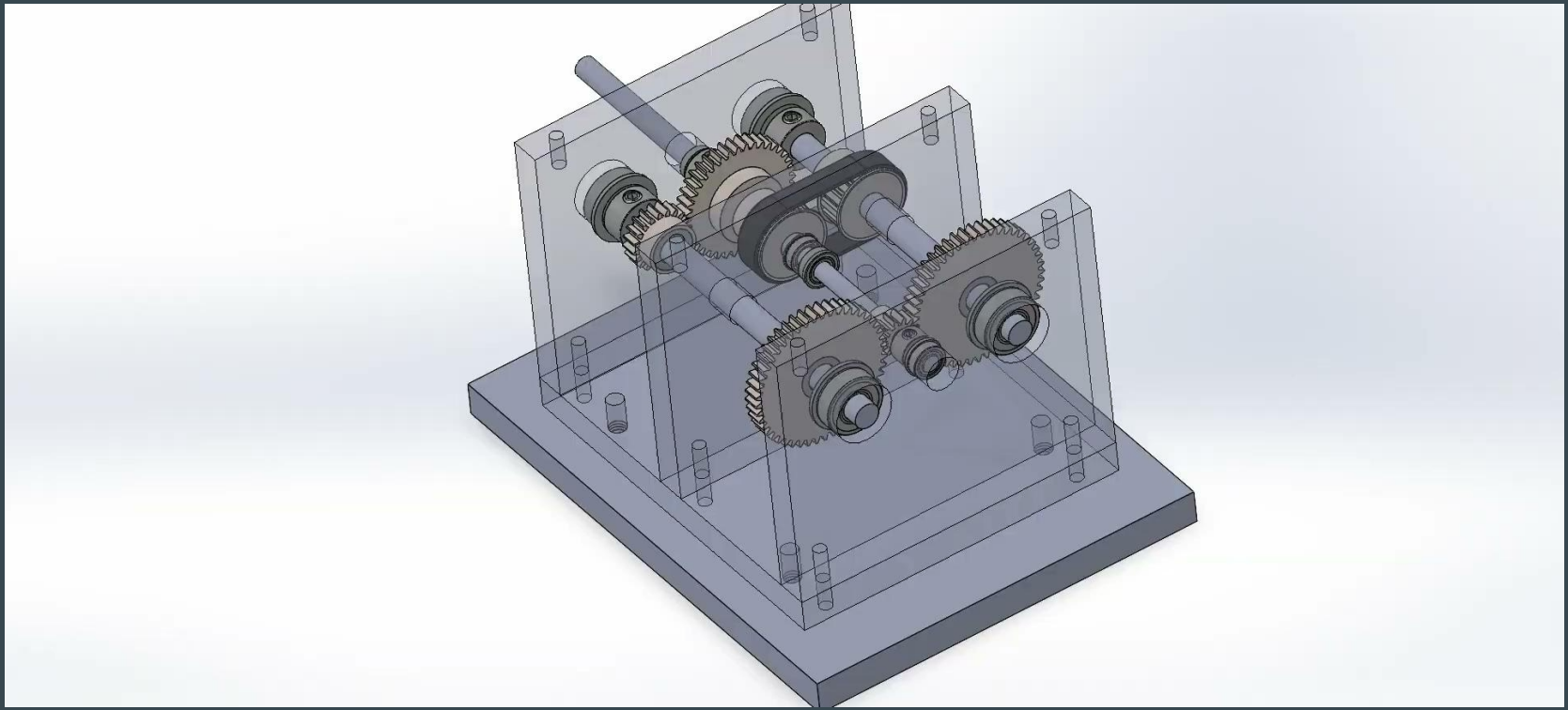

CAD with High Speed Gear Motion

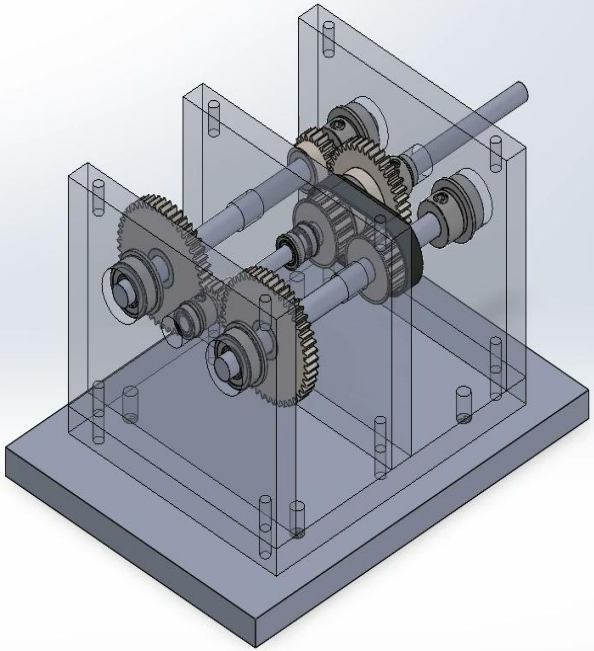

Sources for Material Properties

- Acetal: https://www.matweb.com/search/DataSheet.aspx?MatGUID=c3039ef87c9245448cdebe961b19a54c&ckck=1
- 6061 Aluminum*: https://asm.matweb.com/search/SpecificMaterial.asp?bassnum=ma6061t6
- AISI 12L14 Steel: https://www.matweb.com/search/DataSheet.aspx?MatGUID=fa62760bdedd40c79c2a2dc2416fb4ab

* Took ¾ of provided tensile yield strength to account for shop Aluminum allegedly being of lower grade