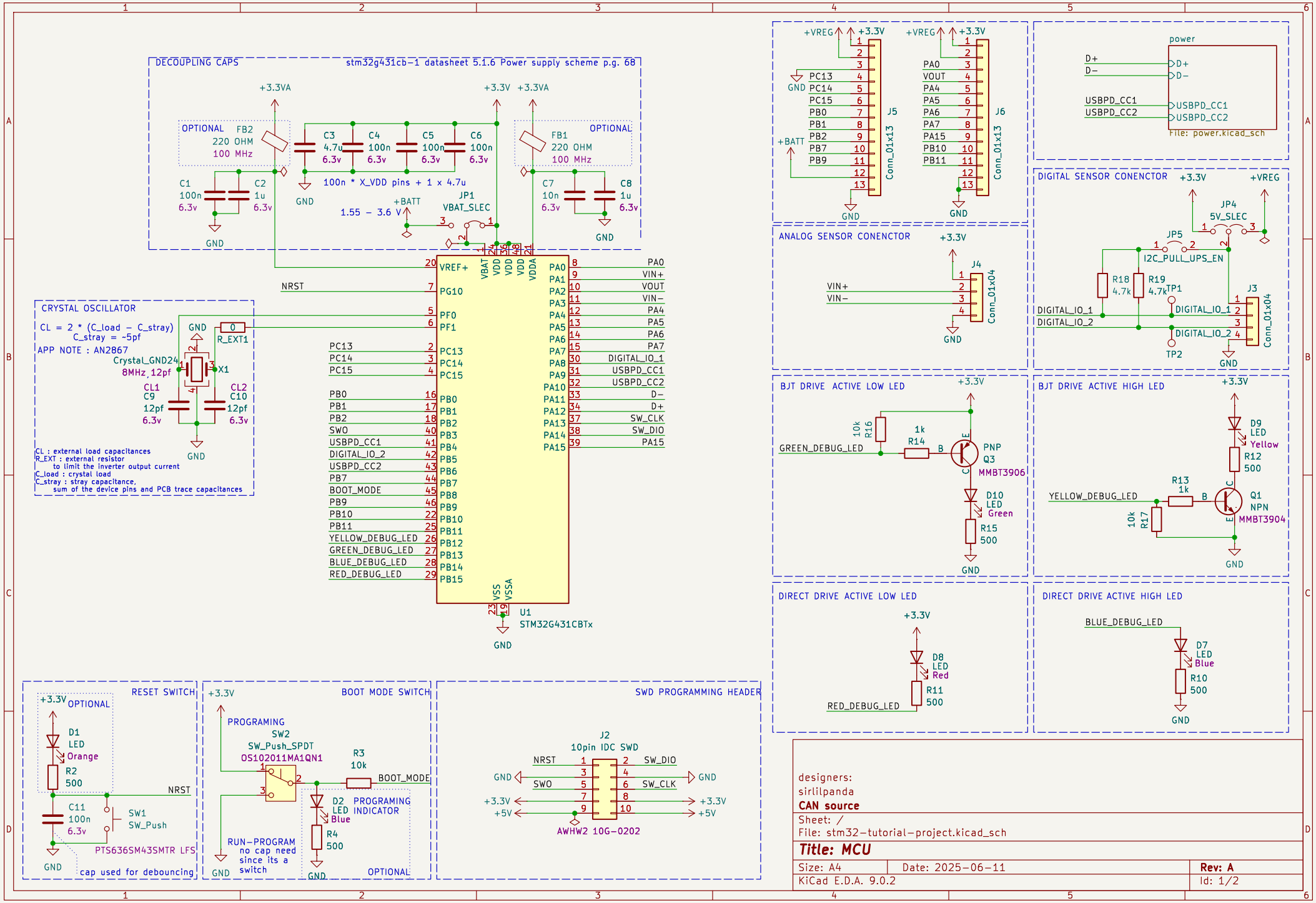
DECOUPLING CAPS
stm32g431cb-1 datasheet 5.1.6 Power supply scheme p.g. 68
+3.3VA
OPTIONAL
FB2
220 OHM
100 MHz
C3 4.7u 6.3v
C4 100n 6.3v
C5 100n 6.3v
C6 100n 6.3v
FB1
220 OHM
100 MHz
C1 100n 6.3v
C2 1u 6.3v
C7 10n 6.3v
C8 1u 6.3v
GND
100n * X_VDD pins + 1 x 4.7u
+BATT
1.55 – 3.6 V
JP1
VBAT_SLEC
CRYSTAL OSCILLATOR
CL = 2 * (C_load – C_stray)
C_stray = ~5pf
APP NOTE : AN2867
Crystal_GND24
8MHz, 12pf
X1
R_EXT1
CL1 C9 12pf 6.3v
CL2 C10 12pf 6.3v
CL : external load capacitances
R_EXT : external resistor
to limit the inverter output current
C_load : crystal load
C_stray : stray capacitance,
sum of the device pins and PCB trace capacitances
NRST
PC13
PC14
PC15
PB0
PB1
PB2
SWO
USBPD_CC1
DIGITAL_IO_2
USBPD_CC2
PB7
BOOT_MODE
PB9
PB10
PB11
YELLOW_DEBUG_LED
GREEN_DEBUG_LED
BLUE_DEBUG_LED
RED_DEBUG_LED
VREF+
PG10
PF0
PF1
VBAT
VDD
VDDA
VSS
VSSA
PA0
PA1
PA2
PA3
PA4
PA5
PA6
PA7
PA8
PA9
PA10
PA11
PA12
PA13
PA14
PA15
VIN+
VOUT
VIN–
DIGITAL_IO_1
USBPD_CC1
USBPD_CC2
D–
D+
SW_CLK
SW_DIO
U1
STM32G431CBTx
RESET SWITCH
OPTIONAL
D1 LED Orange
R2 500
C11 100n 6.3v
SW1 SW_Push
PTS636SM43SMTR LFS
cap used for debouncing
BOOT MODE SWITCH
PROGRAMING
SW2
SW_Push_SPDT
OS102011MA1QN1
R3 10k
D2 LED Blue
PROGRAMING INDICATOR
R4 500
RUN–PROGRAM
no cap need since its a switch
SWD PROGRAMMING HEADER
J2
10pin IDC SWD
AWHW2 10G-0202
+VREG
J5
J6
Conn_01x13
power
File: power.kicad_sch
DIGITAL SENSOR CONENCTOR
JP4
5V_SLEC
JP5
I2C_PULL_UPS_EN
R18 4.7k
R19 4.7k
TP1
TP2
J3
Conn_01x04
ANALOG SENSOR CONENCTOR
J4
BJT DRIVE ACTIVE LOW LED
R16 10k
R14 1k
PNP
Q3
MMBT3906
D10 LED Green
R15 500
BJT DRIVE ACTIVE HIGH LED
D9 LED Yellow
R12 500
R13 1k
R17 10k
Q1
NPN
MMBT3904
DIRECT DRIVE ACTIVE LOW LED
D8 LED Red
R11 500
DIRECT DRIVE ACTIVE HIGH LED
D7 LED Blue
R10 500
designers:
sirlilpanda
CAN source
Sheet: /
File: stm32-tutorial-project.kicad_sch
Title: MCU
Size: A4
Date: 2025-06-11
Rev: A
KiCad E.D.A. 9.0.2
Id: 1/2

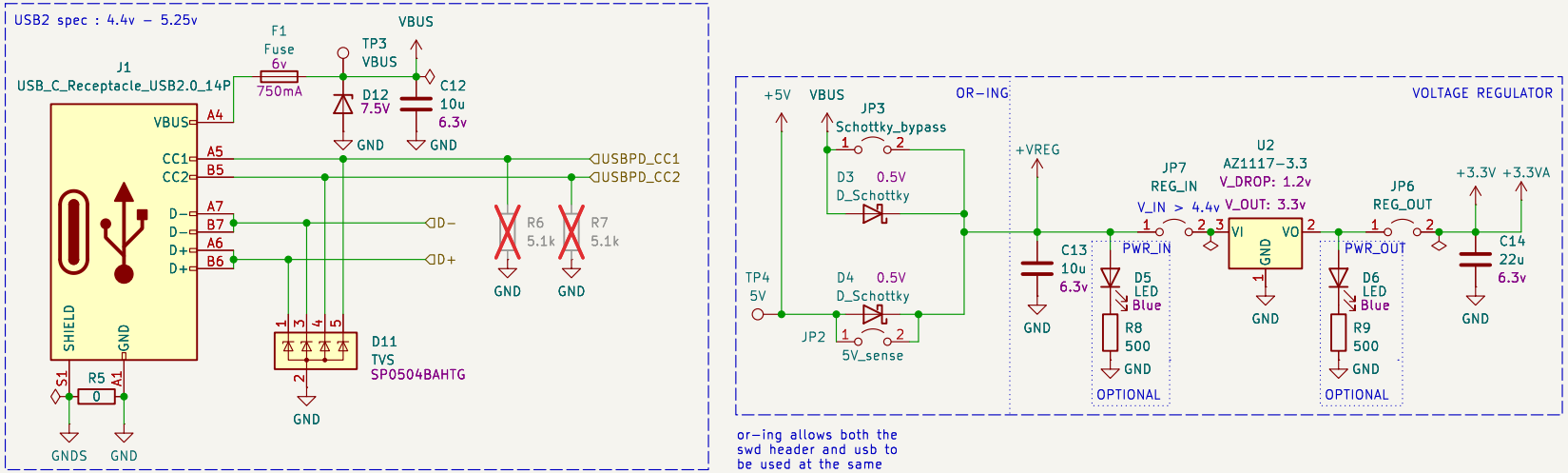

or–ing allows both the
swd header and usb to
be used at the same
time, since neither will
back feed into eachother.
although a jumper has been
added since some swd programers
use this voltage rail as a sense pin

CAN source

Sheet: /power/
File: power.kicad_sch

Title: POWER

Size: A4	Date: 2025–06–11	Rev:
KiCad E.D.A. 9.0.2		Id: 2/2