## Controller Setup

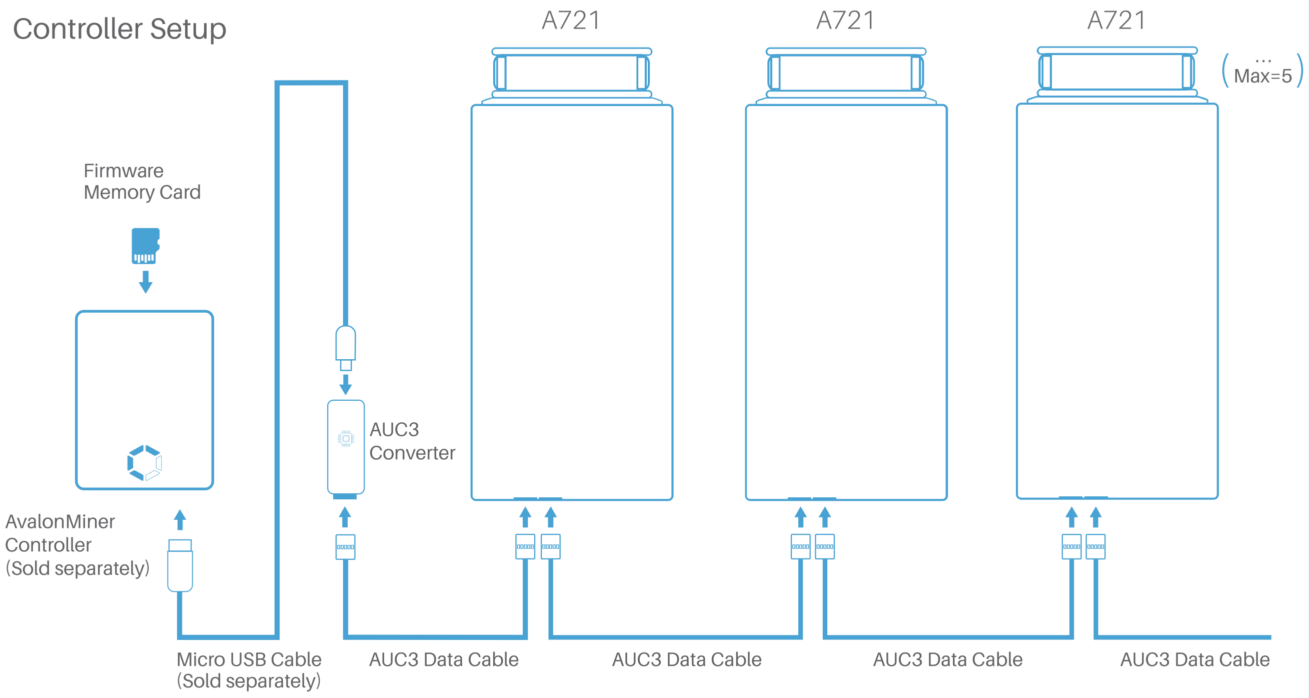
A721
A721
A721
…
Max=5
Firmware
Memory Card
AUC3
Converter
AvalonMiner
Controller
(Sold separately)
Micro USB Cable
(Sold separately)
AUC3 Data Cable
AUC3 Data Cable
AUC3 Data Cable
AUC3 Data Cable

## Power Setup

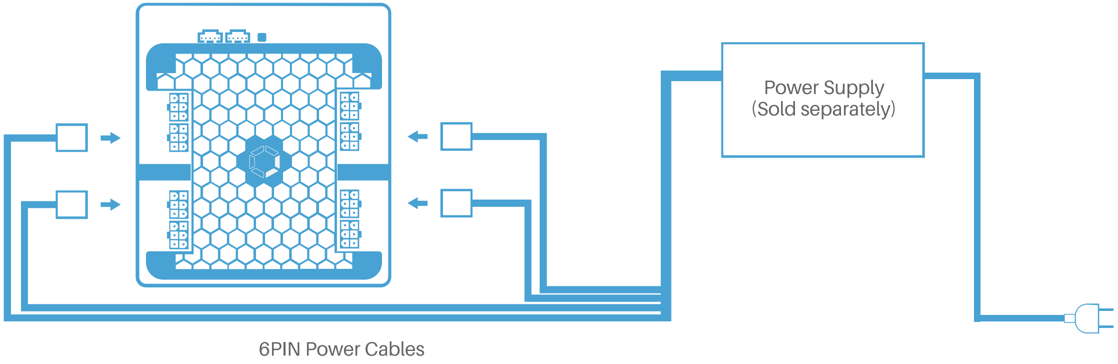
Power Supply
(Sold separately)
6PIN Power Cables

Full legal disclaimer, licenses and warranty are available at:
https://canaan.io/legal

Canaan

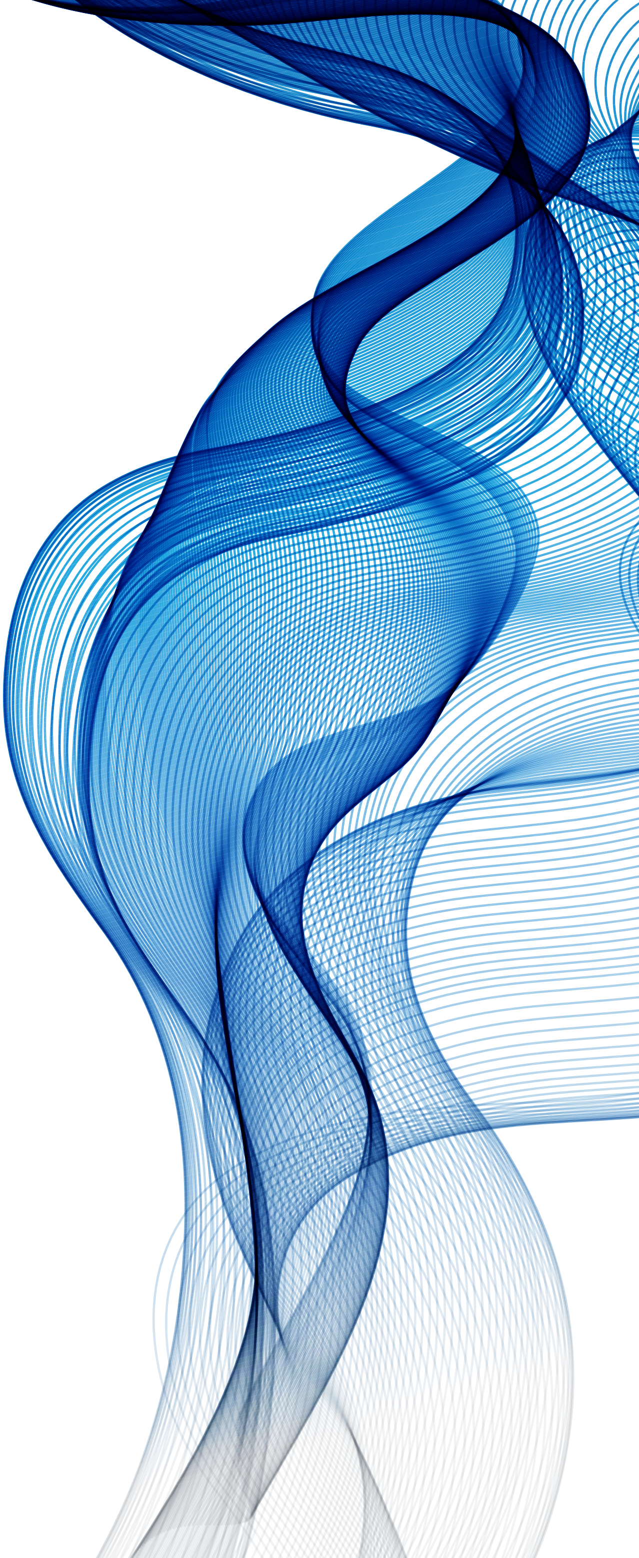

# Thank You!

For choosing an AvalonMiner 721.

Your product support is here.

https://canaan.io/support/avalon7