Controller Setup

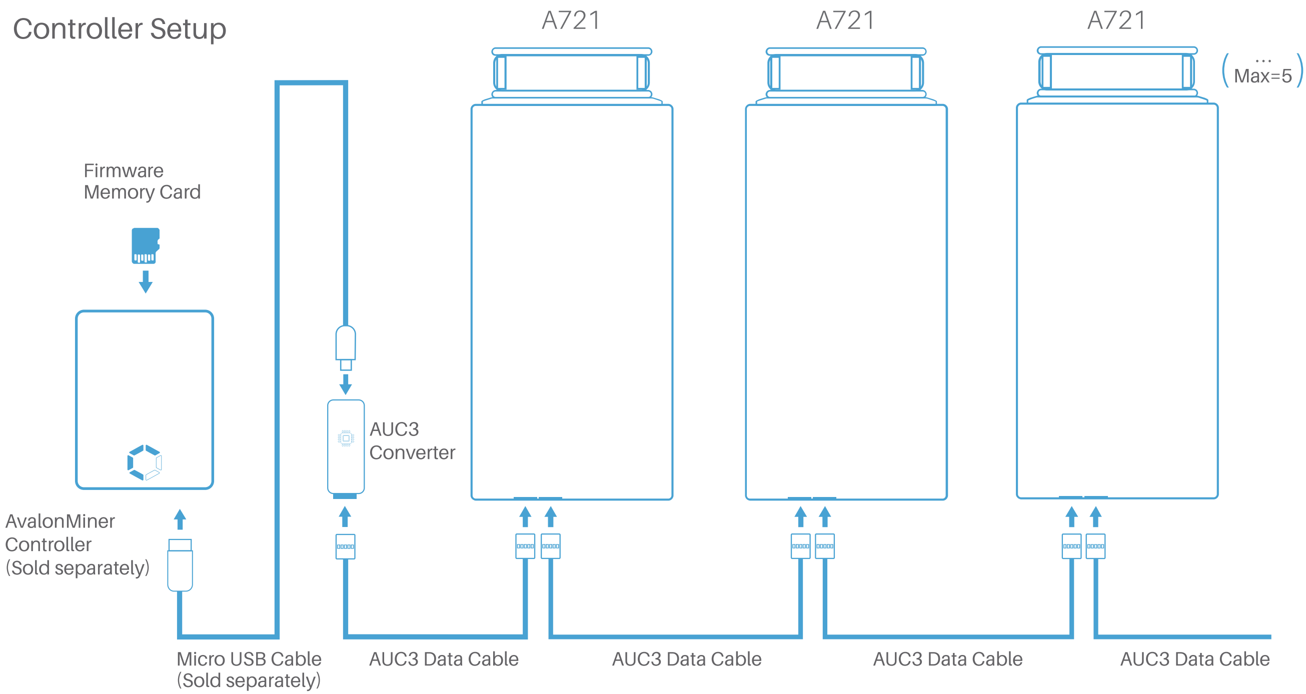
A721
A721
A721
...
Max=5
Firmware
Memory Card
AvalonMiner
Controller
(Sold separately)
AUC3
Converter
Micro USB Cable
(Sold separately)
AUC3 Data Cable
AUC3 Data Cable
AUC3 Data Cable
AUC3 Data Cable

Power Setup

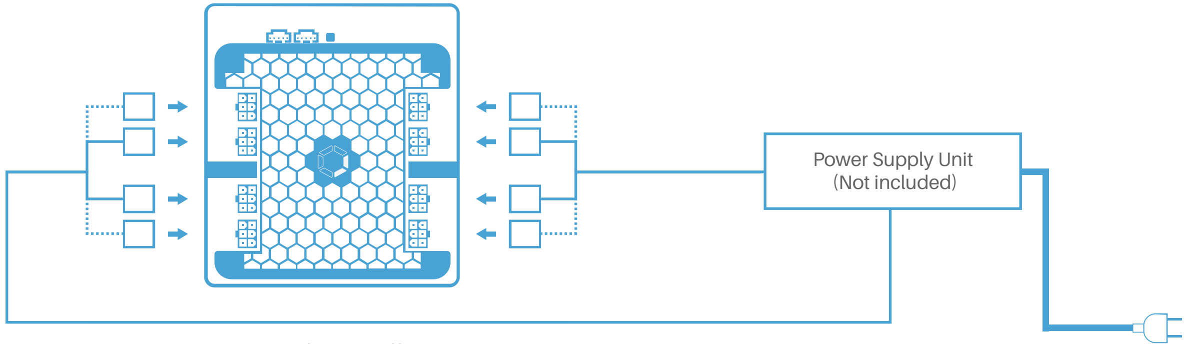
Power Supply Unit
(Not included)

Use 8 x 6PIN for Max. Efficiency.

Full legal disclaimer, licenses and warranty are available at:
https://canaan.io/legal

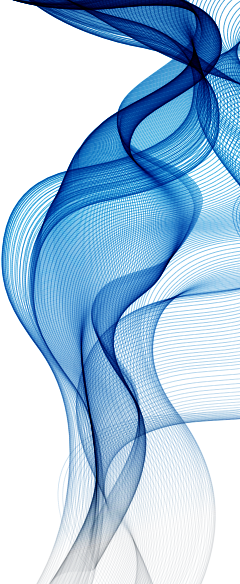

Thank You!

For choosing an AvalonMiner 721.

Your product support is here:

https://canaan.io/support/avalon7