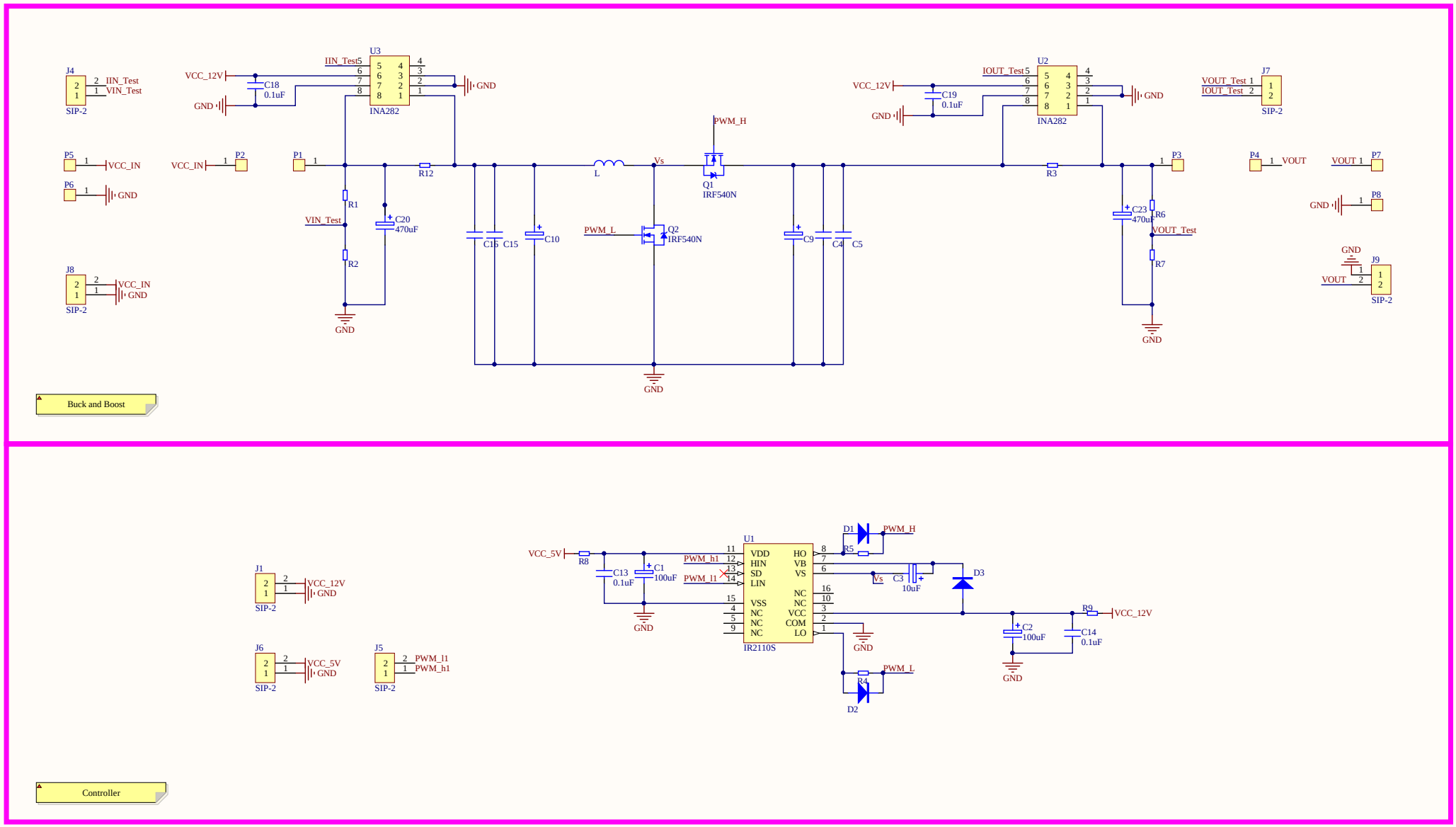

Title		
BUCK / BOOST		
Size A3	Number CL-BB-01	Revision v2.1
Date: 2019/9/7		Sheet of
File: \\..\Sheet-CL_BB_01.SchDoc		Drawn By: Canaan Lv