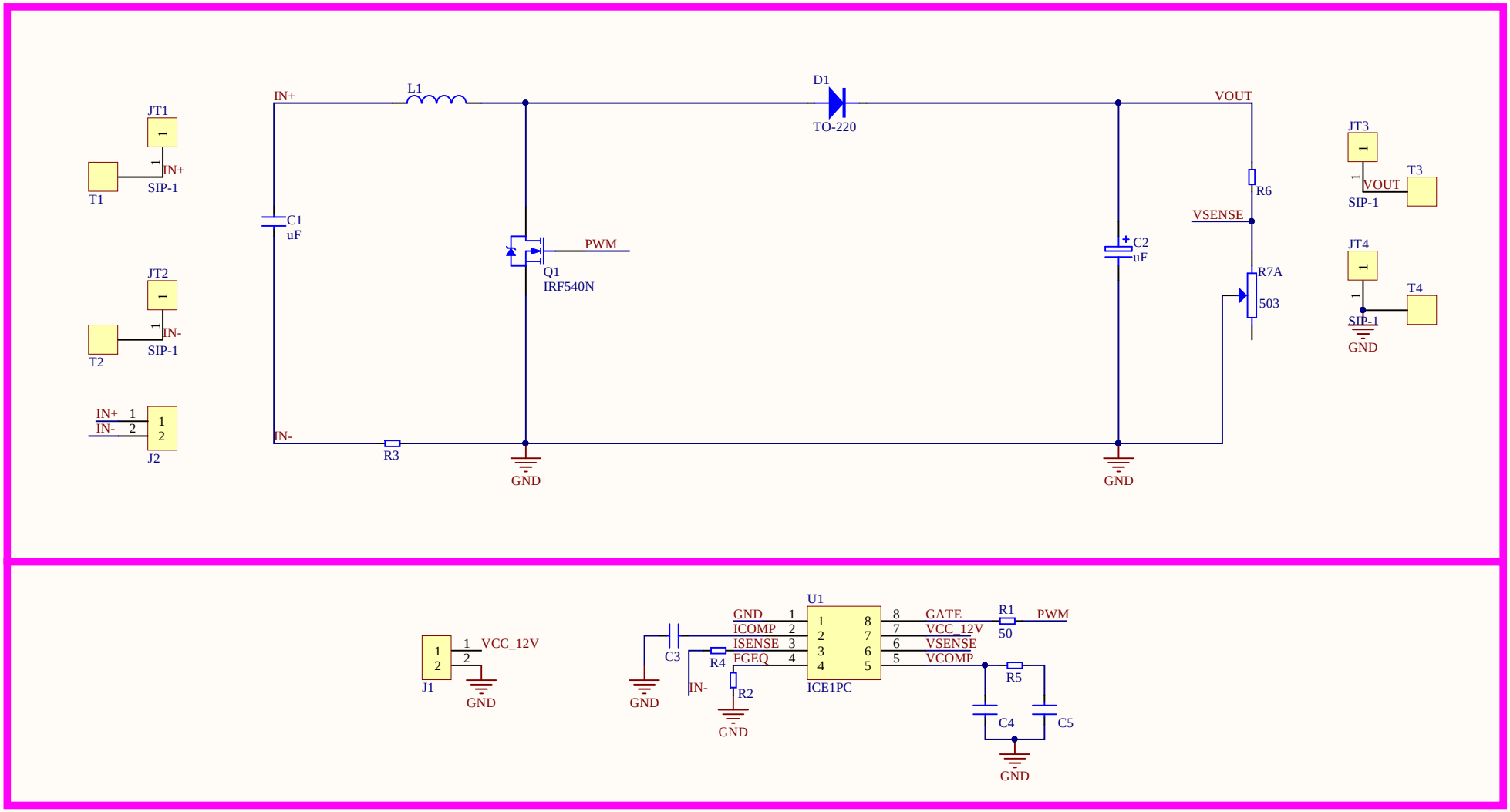

Title	PFC with DIODE (https://notes.canlv.top/)	
Size A4	Number CL-PFC-01	Revision v1.1
Date: 2019/9/7		Sheet of
File: \\..\Sheet_CL-PFC-01.SchDoc		Drawn By: Canaan Lv