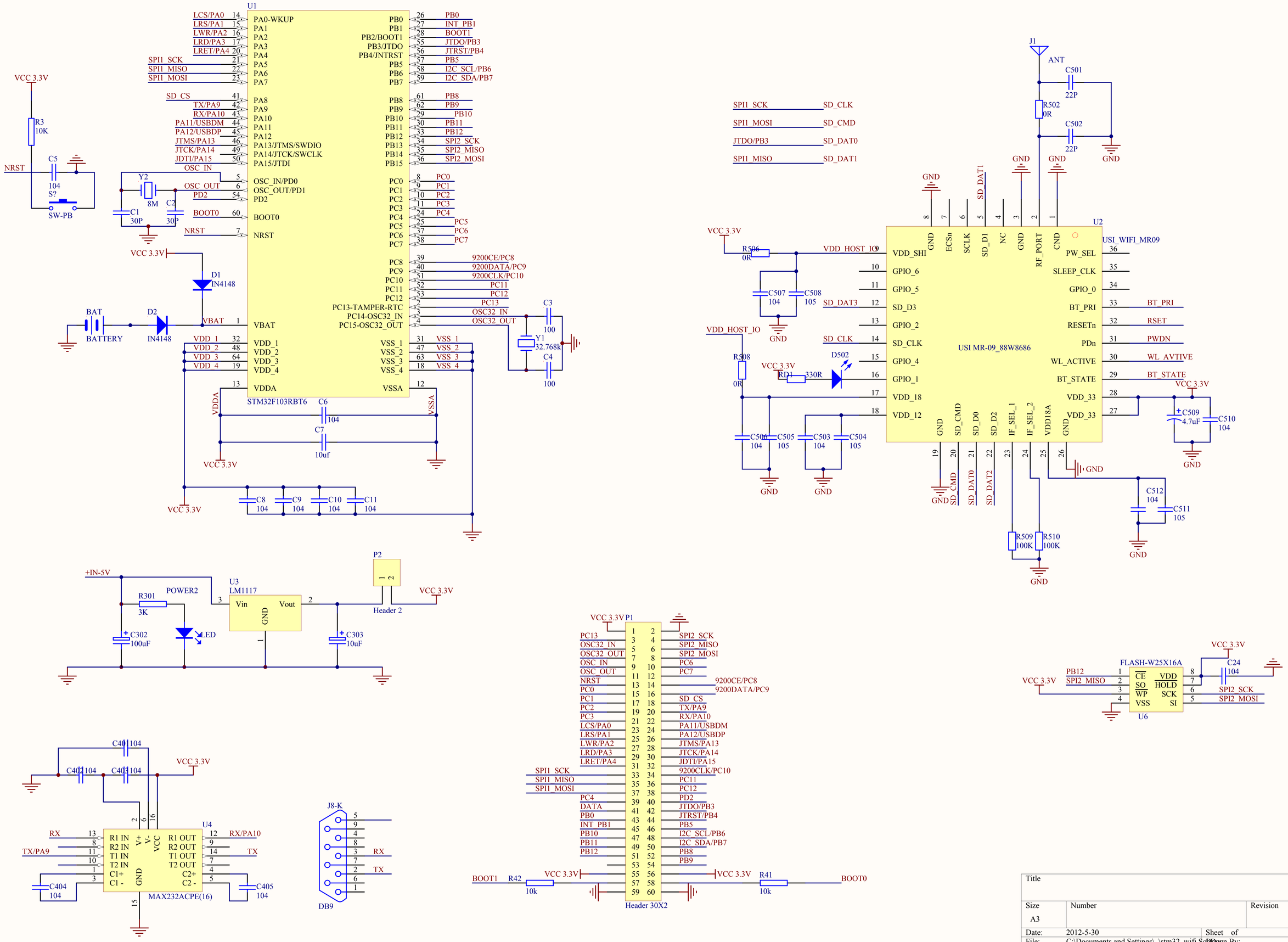

Title		
Size A3	Number	Revision
Date: 2012-5-30		Sheet of
File: C:\Documents and Settings\...\stm32_wifi.SchDoc		Drawn By: