In-memory computing using Memristors

Intro and Motivation

Sparsh Mittal

IIT Roorkee

Acronyms

- Neural network (NN), Deep learning (DL)
- Memristor crossbar array (MCA)
- Resistive RAM (ReRAM)
- Floating-point (FP), most/least-significant bit (MSB/LSB)
- Convolution (CONV), fully-connected (MVM)
- Processing-in-memory (PIM)
- Matrix-vector multiplication (MVM)
- Analog-to-digital/digital-to-analog converter (ADC/DAC)
- Convolutional NN (CNN)

Motivation

- Von-Neumann style compute-centric architectures are becoming constrained by data movement energy and memory BW
- Data movement between the core and off-chip memory incurs >100X energy than a FP operation
- To address these challenges, "processing in/near memory" (aka near-data processing) has been proposed

Processing in memory

- Computation logic is placed inside memory
- Or the characteristic of memory itself is exploited for performing computations
- This approach avoids data movement completely and thus, promises to break the memory wall

PIM can reduce data movement!

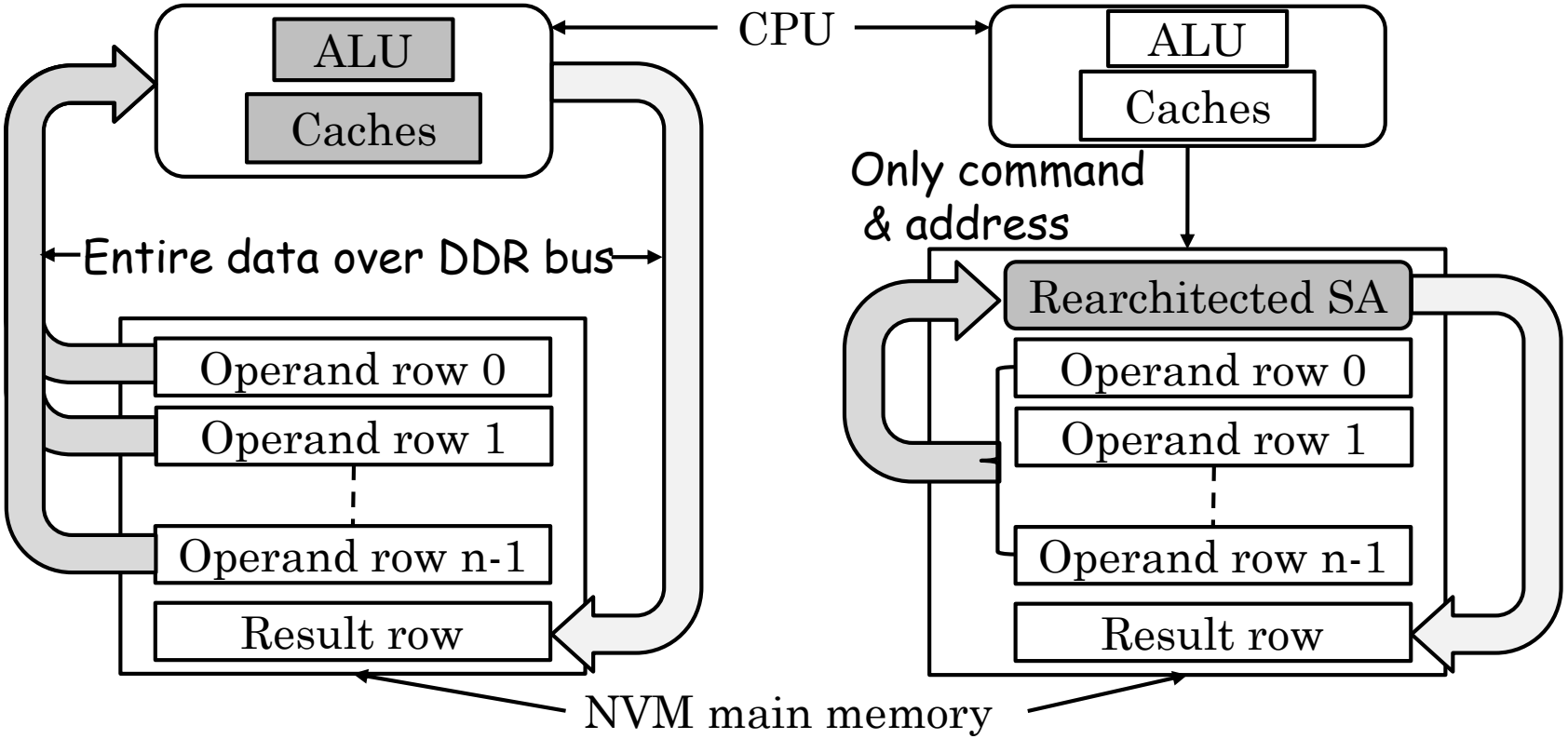

(a) Conventional approach (b) Processing-in-memory approach

SA = sense amplifier

Processing-in-Memory (PIM) for DNNs

- Brings compute to where weight data is stored.
  - No need to move weights at all

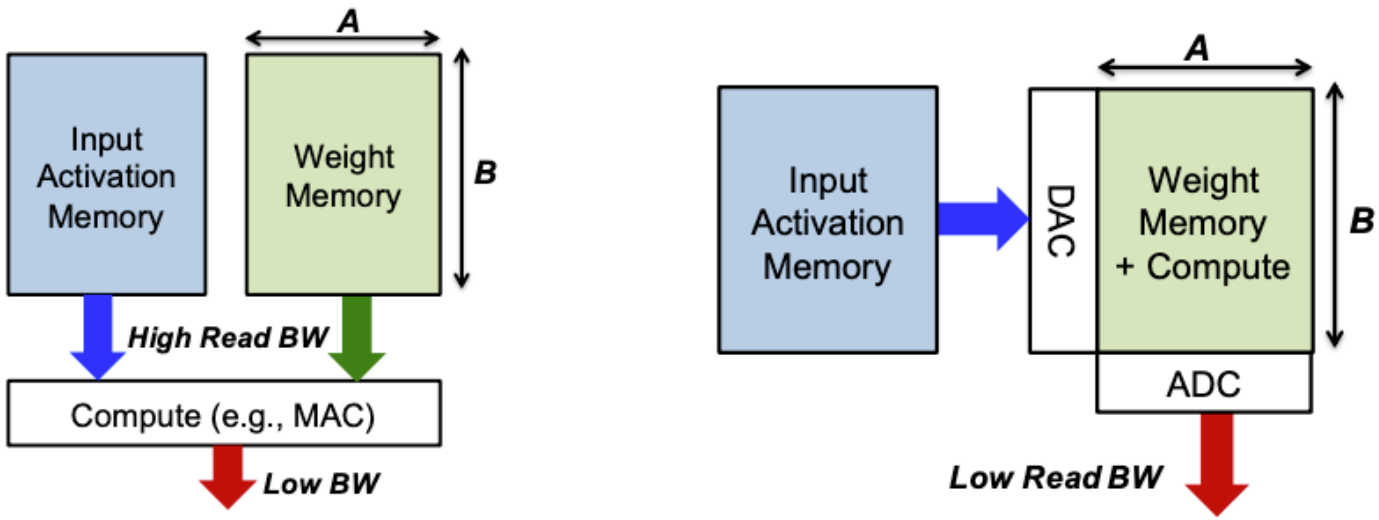

(a) Conventional

(b) Processing in memory

Efficient Processing of Deep Neural Networks, Sze, Chen, Yang, Emer

What is memristor

- A memristor is a hypothetical non-linear component relating electric charge and magnetic flux linkage.
- Memristor's electrical resistance is not constant but depends on the history of current that had previously flowed through the device.
- Its present resistance depends on how much electric charge has flowed in what direction through it in the past.
- When electric power supply is turned off, memristor remembers its most recent resistance until it is turned on again.
- ReRAM is a possible realization of memristor

A Comparison of Memory Technologies

	SRAM	DRAM	eDRAM	2D NAND Flash	PCM	STT-RAM	2D ReRAM
Non-volatile	N	N	N	Y	Y	Y	Y
Cell size (F^2)	50-200	4-6	19-26	2-5	4-10	8-40	4
Read time (ns)	<1	30	5	10^4	10-50	3-10	10-50
Write time (ns)	<1	50	5	10^5	100-300	3-10	10-50
Read power	Low	Low	Low	High	Low	Medium	Medium
Write Power	Low	Low	Low	High	High	Medium	Medium
Write endurance	10^{16}	10^{16}	10^{16}	10^4-10^5	10^8-10^9	10^{15}	10^8-10^{12}
Power (other than R/W)	Leakage	Refresh	Refresh	None	None	None	Sneak

Optimum Very good Tolerable Challenge

Benefit of ReRAM over SRAM for PIM

- **SRAM:** volatile, high-leakage, does not support PIM (efficiently)
- Modeling a neuron requires tens of transistors

- **ReRAM:** NVM with ~0 leakage, high density
- Supports analog MVM, search and bitwise operations within memory

Performing dot-product computation

Wires as ALU (1 of 2)

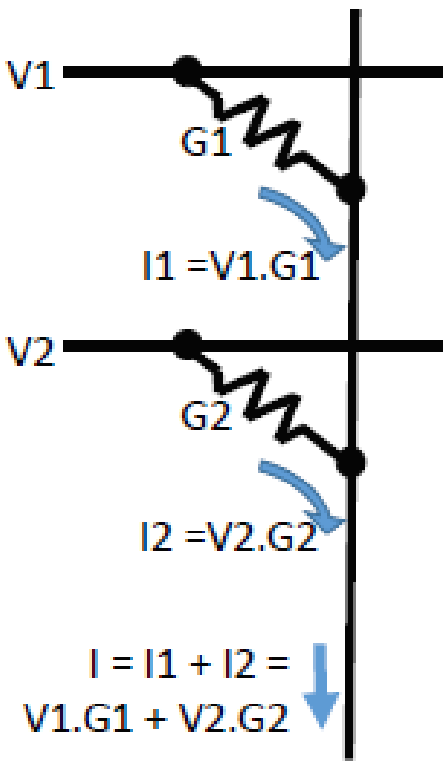

Using a bitline to perform analog "sum of products" (Multiply-accumulate) operation

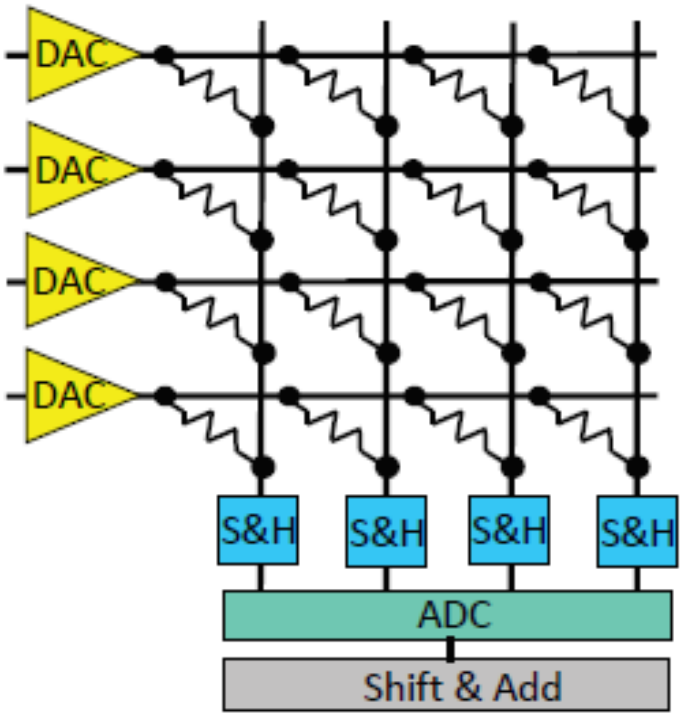

Memristor crossbar for vector-matrix multiplier

Wires as ALU (2 of 2)

- In terms of NN,
- **Voltage:** input to the CNN
- **ReRAM cell conductances:** synaptic weights of neurons
- **Total current:** output of the neuron

- Very high parallelism is achieved!
- CONV and FC layer involves MVM => ReRAM can accelerate CNNs

Solved example

- We want to implement the multiplication operation of convolution layer using memristor.
- The input vector is [4 10 17].
- The weight matrix is:

$$\begin{bmatrix} 2 & 5 & 9 \\ 6 & 11 & 8 \\ 13 & 21 & 27 \end{bmatrix}$$

- Show the memristor circuit for implementing this matrix multiplication.

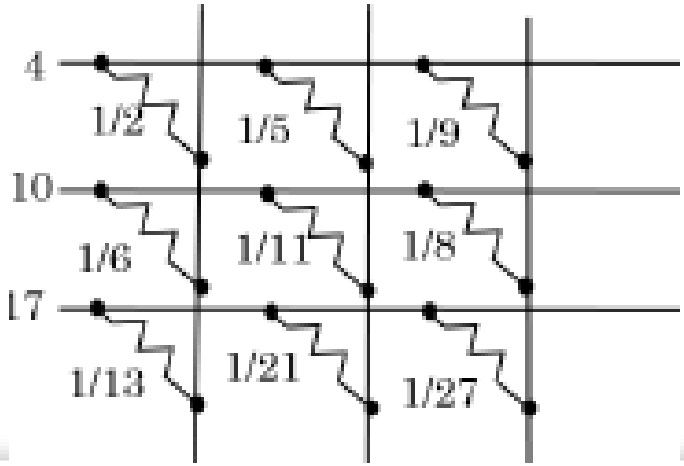

1/2, 1/5 etc. are resistance

Performing bitwise computation

Normal read operation

- Conventionally, for reading a cell, the resistance of a cell is compared against a reference resistance value to read the stored value as 0 or 1

SA reads with $R_{RefRead}$

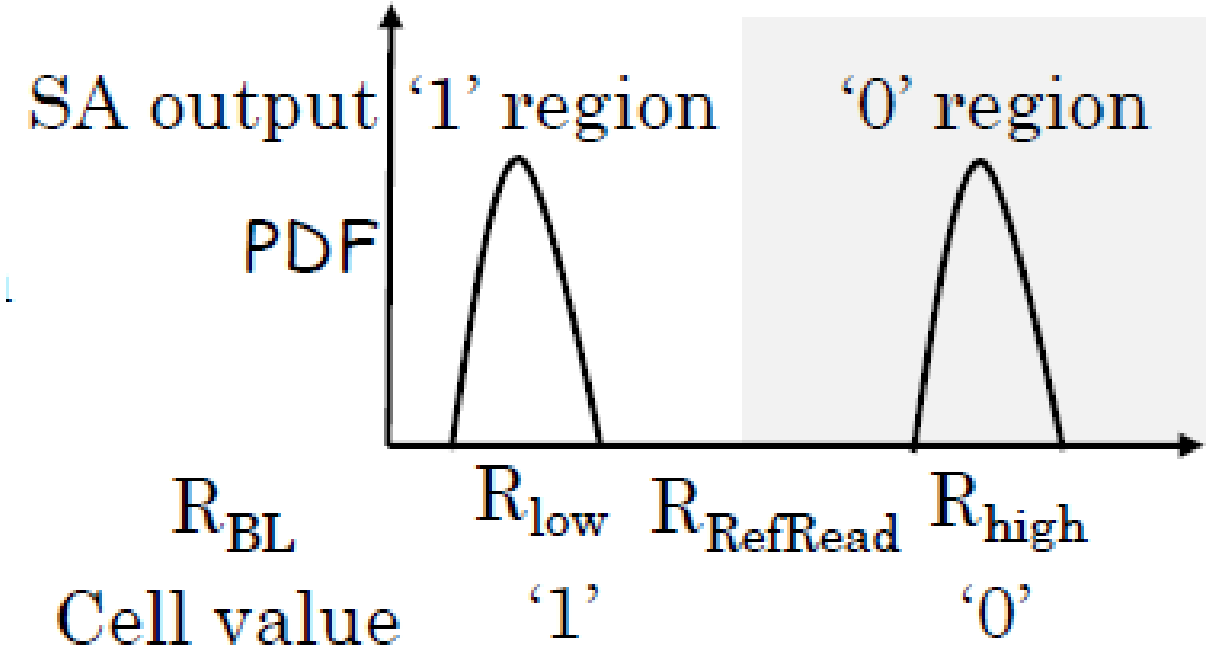

PDF = probability density function

Performing AND/OR operation

- Activate two rows simultaneously => resistance on the bitline becomes the parallel connection of those cells
- For computing AND/OR operations, only the reference resistance needs to be changed
- E.g., for computing OR, reference resistance should be changed to R_{RefOR}

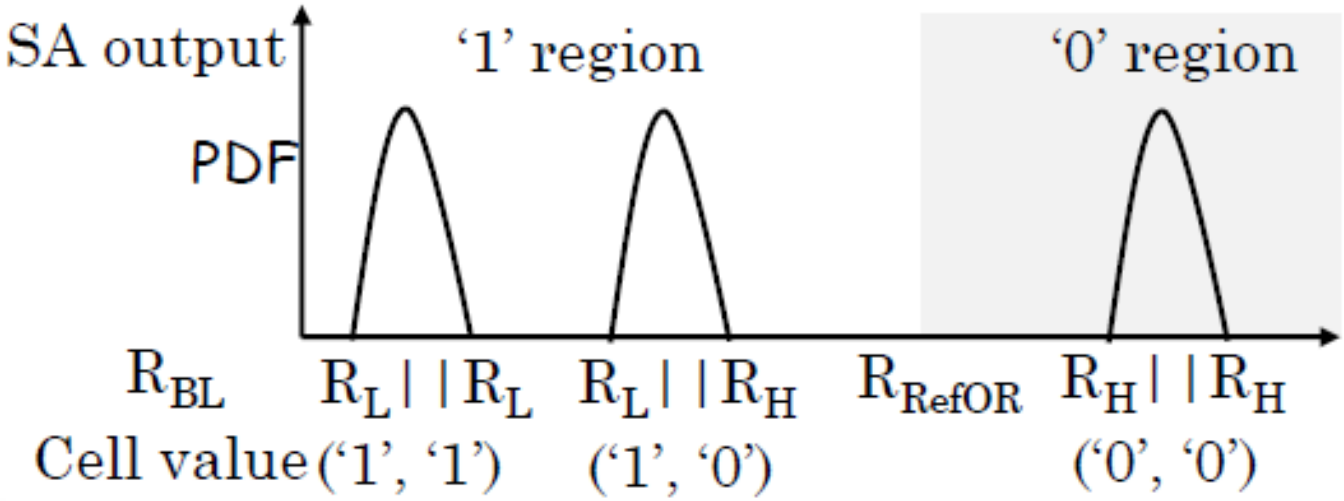

- Similarly, NOT and XOR operations can be implemented.