Cerebras Wafer Scale Engine

Sparsh Mittal

Courtesy: Cerebras presentations and Various websites

Contents

- Quick intro
- What is a WSE
- WSE architecture
- Advantage of WSE over cluster of chips
- Comparison with GPU etc.

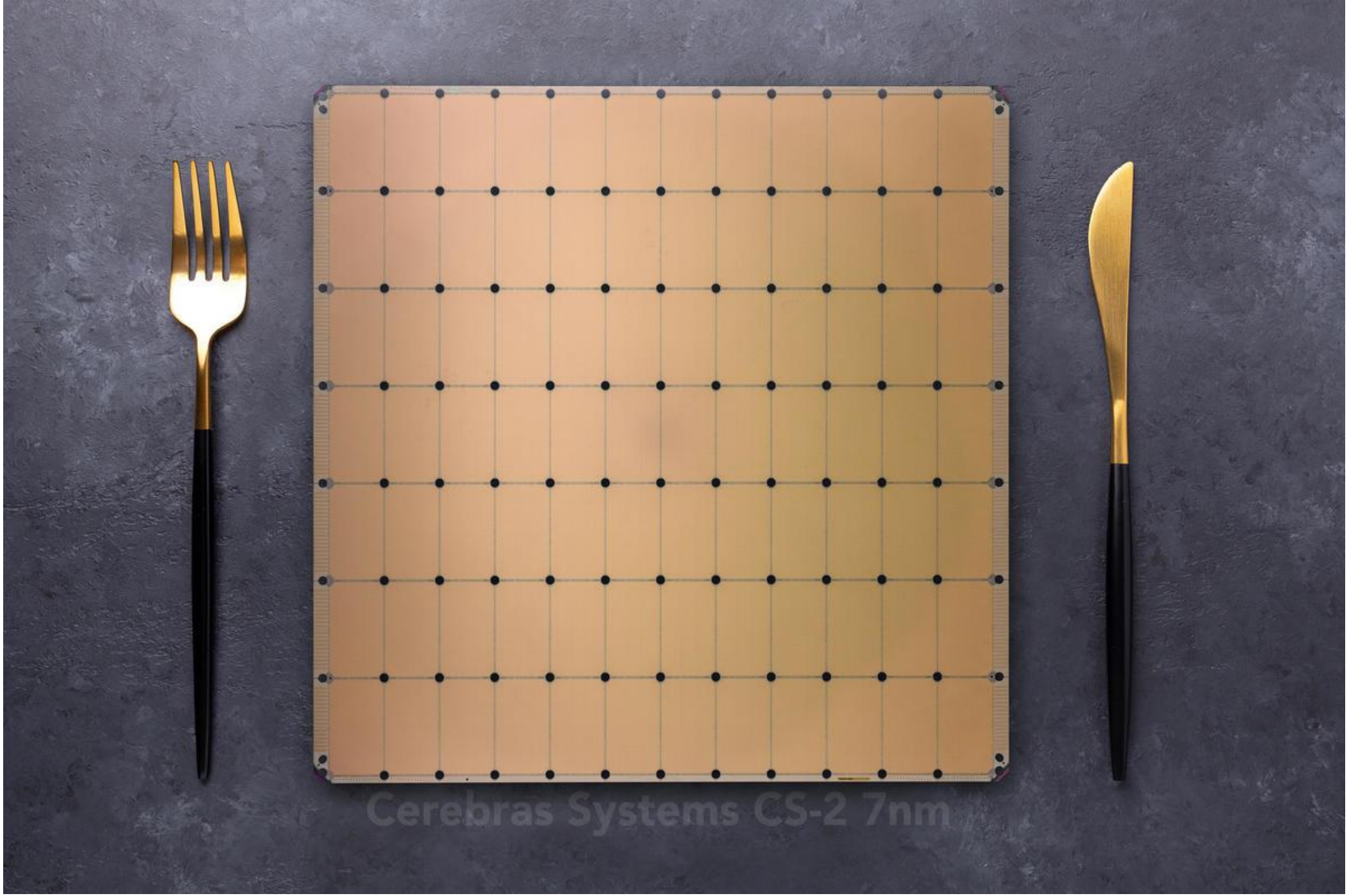
Cerebras Systems CS-2 7nm

Cerebras's Wafer Scale Engine (2019)

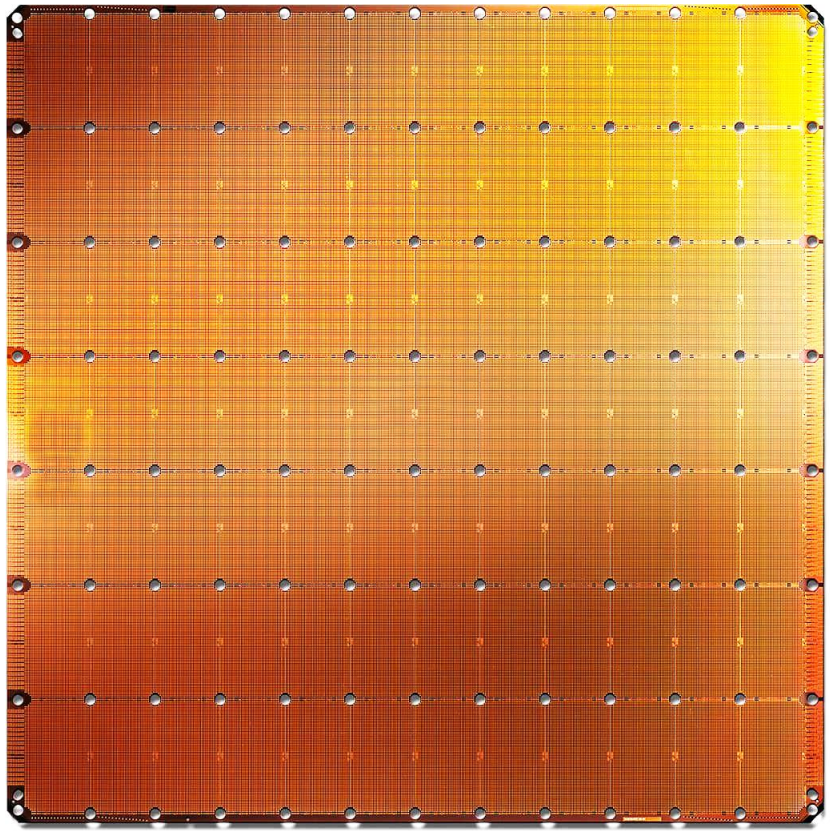

- The largest ML accelerator chip

16nm

- 400,000 cores

Cerebras WSE
1.2 Trillion transistors
46,225 mm^2

Largest GPU
21.1 Billion transistors
815 mm^2
NVIDIA TITAN V

Intel's first 4004 processor in 1971 had 2,300 transistors

Cerebras's Wafer Scale Engine-2 (2021)

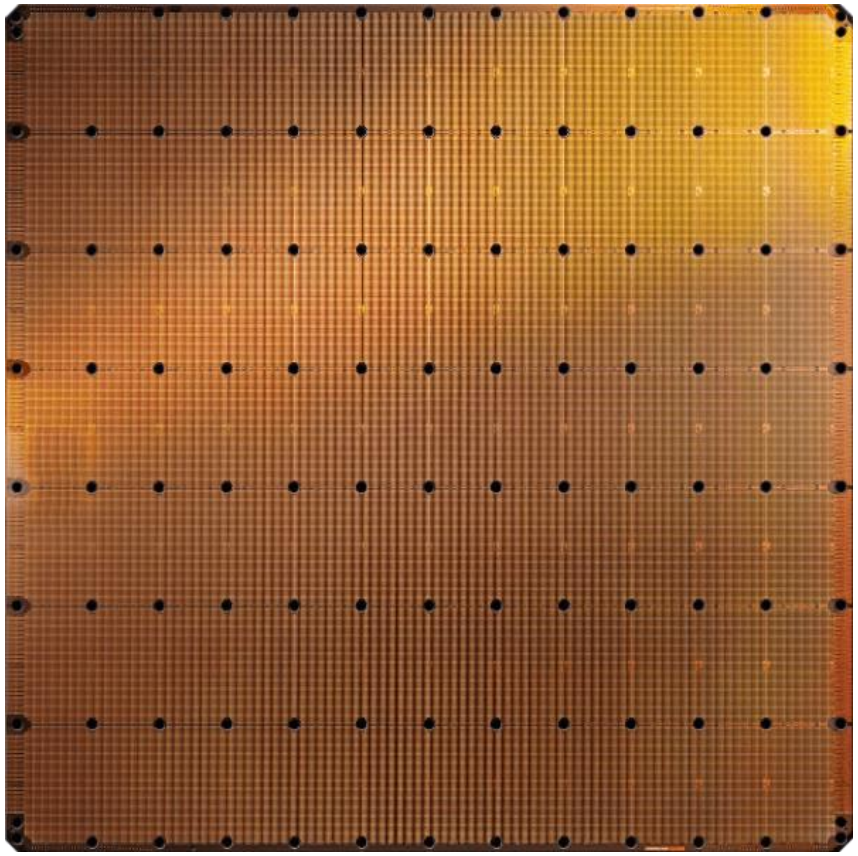

- The largest ML accelerator chip

7nm

- 850,000 cores

Cerebras WSE-2
2.6 Trillion transistors
46,225 mm^2

Largest GPU
54.2 Billion transistors
826 mm^2
NVIDIA Ampere GA100

WSE-1 vs WSE-2

Cerebras Wafer Scale			
AnandTech	Wafer Scale Engine Gen1	Wafer Scale Engine Gen2	Increase
AI Cores	400,000	850,000	2.13x
Manufacturing	TSMC 16nm	TSMC 7nm	-
Launch Date	August 2019	Q3 2021	-
Die Size	46225 mm^2	46225 mm^2	-
Transistors	1200 billion	2600 billion	2.17x
(Density)	25.96 mTr/mm^2	56.246 mTr/mm^2	2.17x
On-board SRAM	18 GB	40 GB	2.22x
Memory Bandwidth	9 PB/s	20 PB/s	2.22x
Fabric Bandwidth	100 Pb/s	220 Pb/s	2.22x
Cost	$2 million+	?	?

WSE-3

Fabrication process
5nm

Silicon area
46,225mm²

Transistors
4 Trillion

AI-optimized cores
900,000

Memory (on-chip)
44GB

Memory bandwidth
21PB/s

Fabric bandwidth
214Pb/s

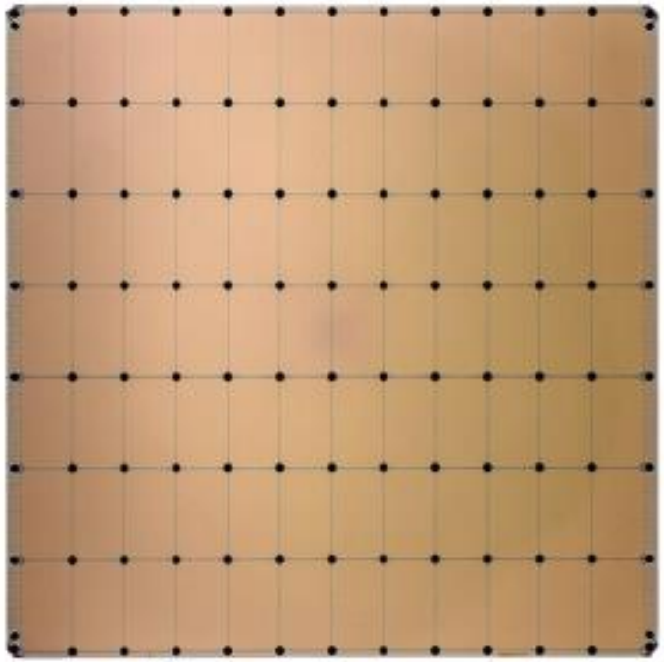

Cerebras WSE-3
4 Trillion Transistors
46,225 mm² Silicon

Largest GPU
80 BillionTransistors
814 mm² Silicon

WSE-3 features 44GB of on-chip SRAM, spread evenly across the entire surface of the chip, providing every core with single-clock-cycle access to fast memory at an extremely high bandwidth of 21PB/s. This is 7,000x greater bandwidth than the leading GPU. Fabric bandwidth is >3,715x the bandwidth delivered between the leading GPUs.

Semiconductor wafer

From this, square dies are cut.
Yield =Good/Total
With 150 dies per wafer and 24 defective dies per wafer, yield = 126/150.

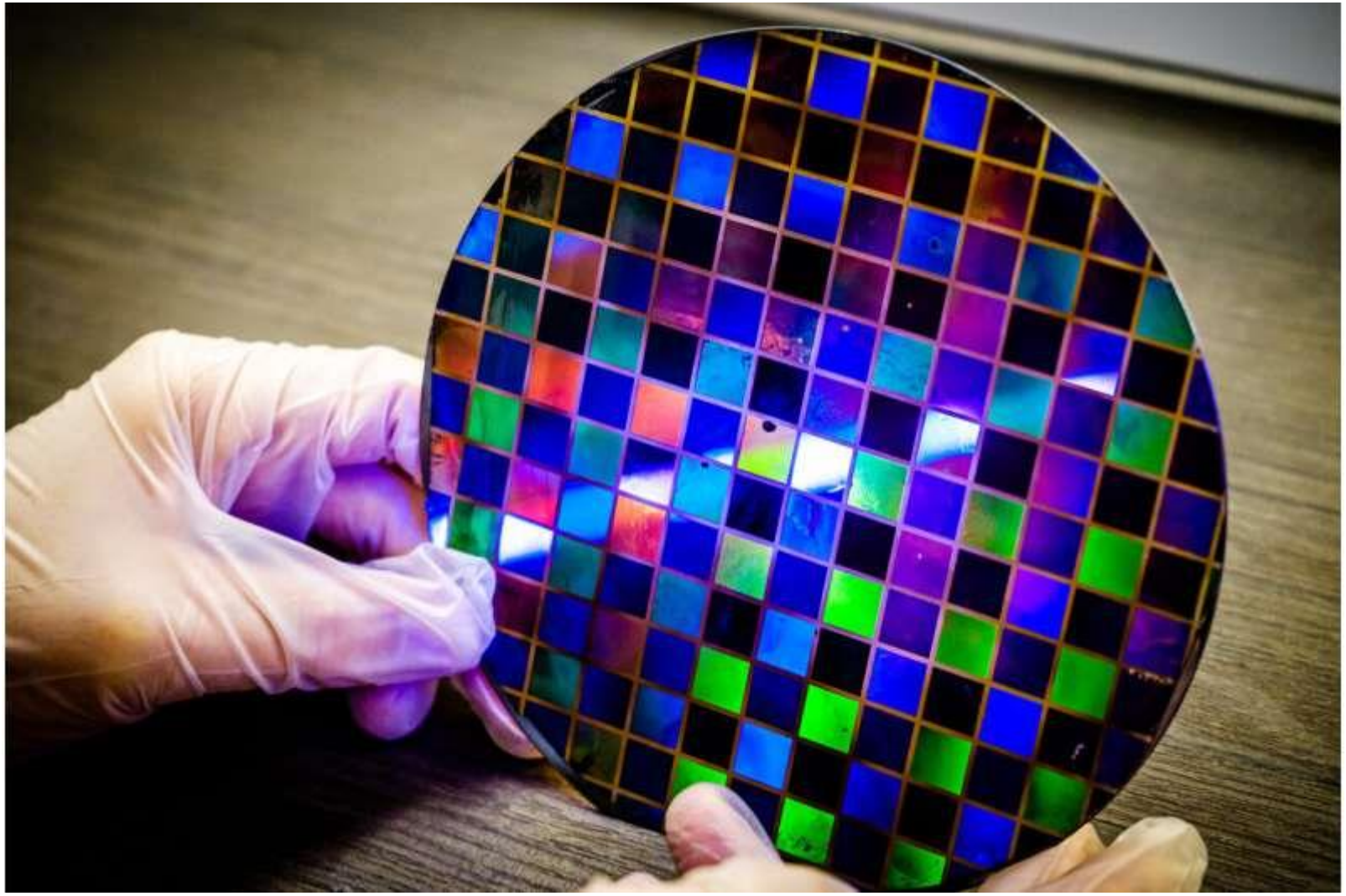

What is WSE

- Conventional processors are fabricated by printing many copies of the same chip onto a wafer.
- Then, wafer is cut into individual chips, which are packaged and sold as individual processors.
- People spend huge time, money, and effort to re-connect these chips — via InfiniBand and other interconnect technologies — back into clusters.
- Cerebras WSE does NOT cut the wafer. It cuts largest square from a single silicon wafer. That is called WSE.

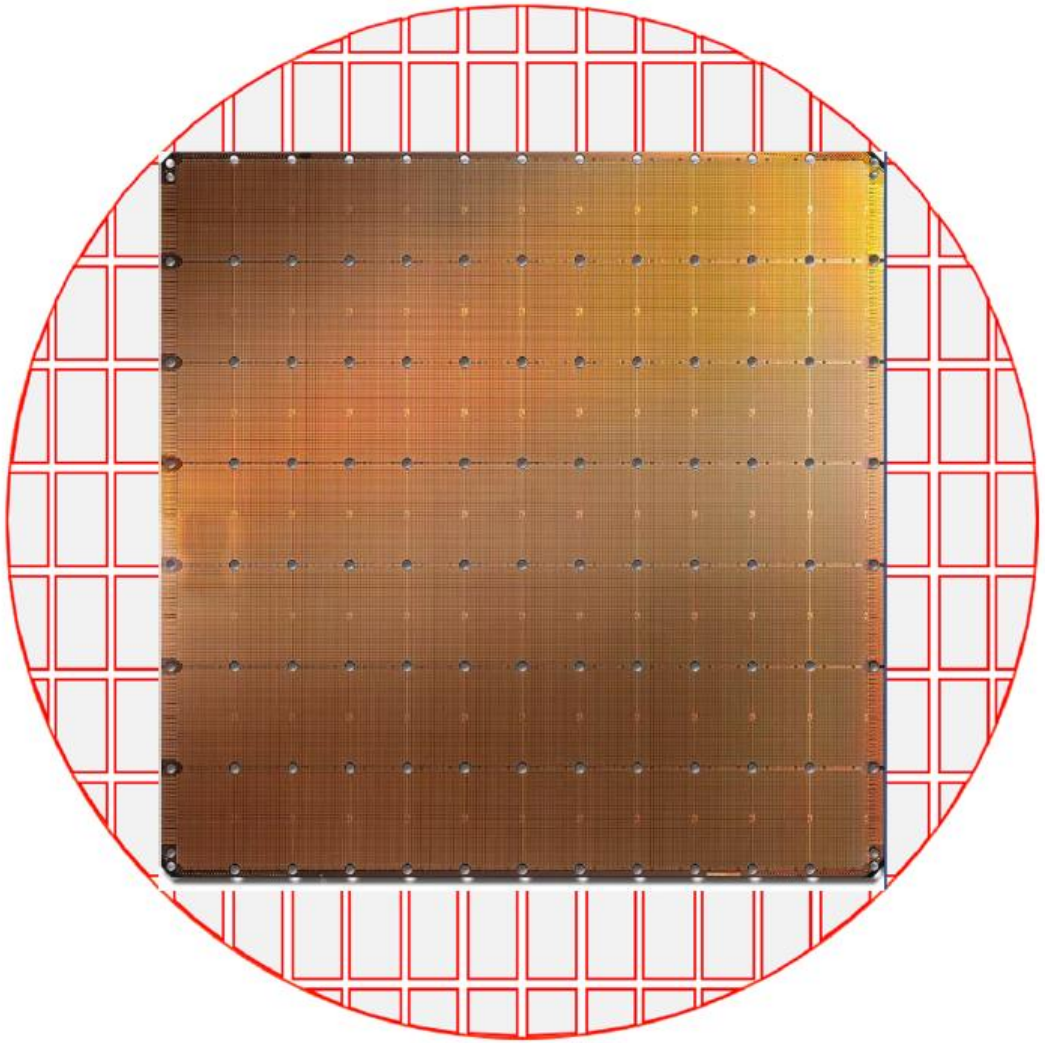

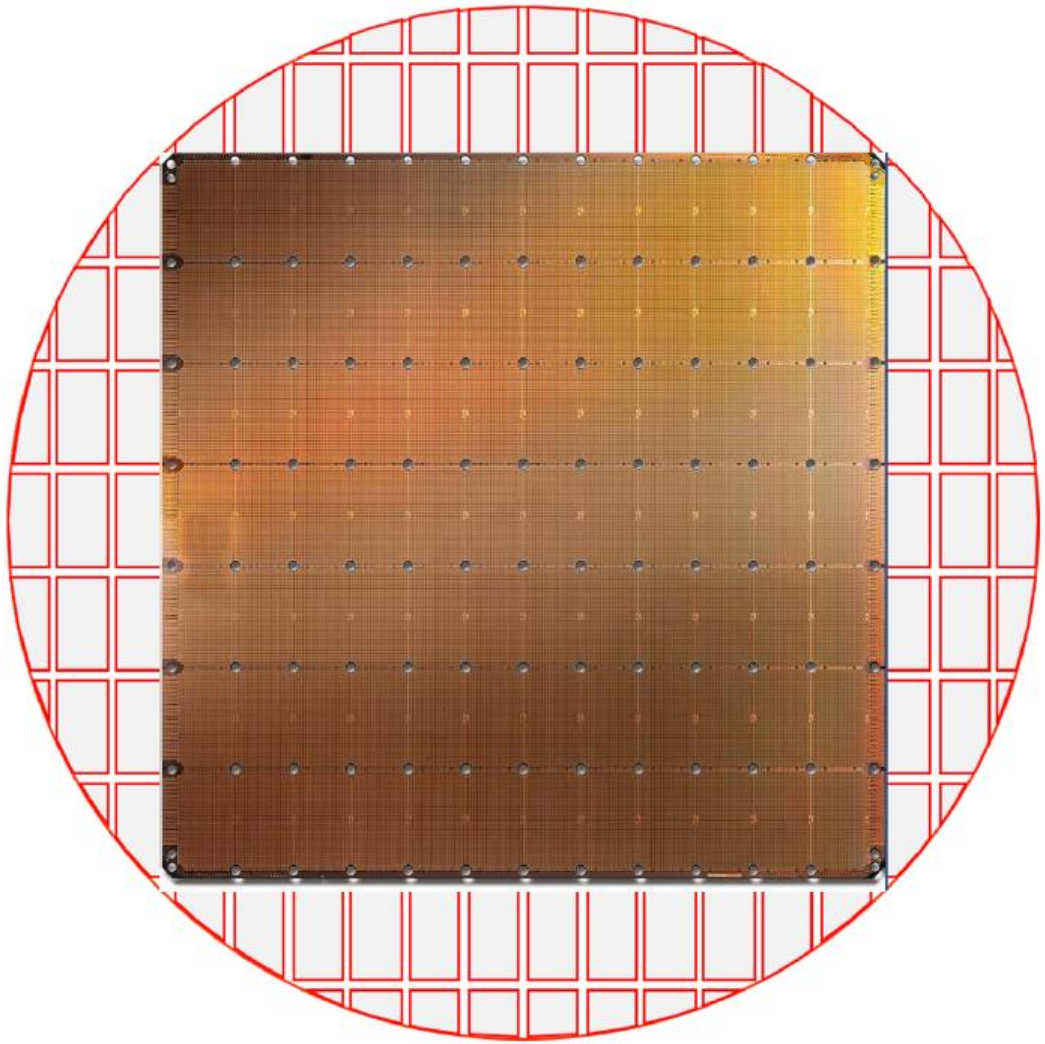

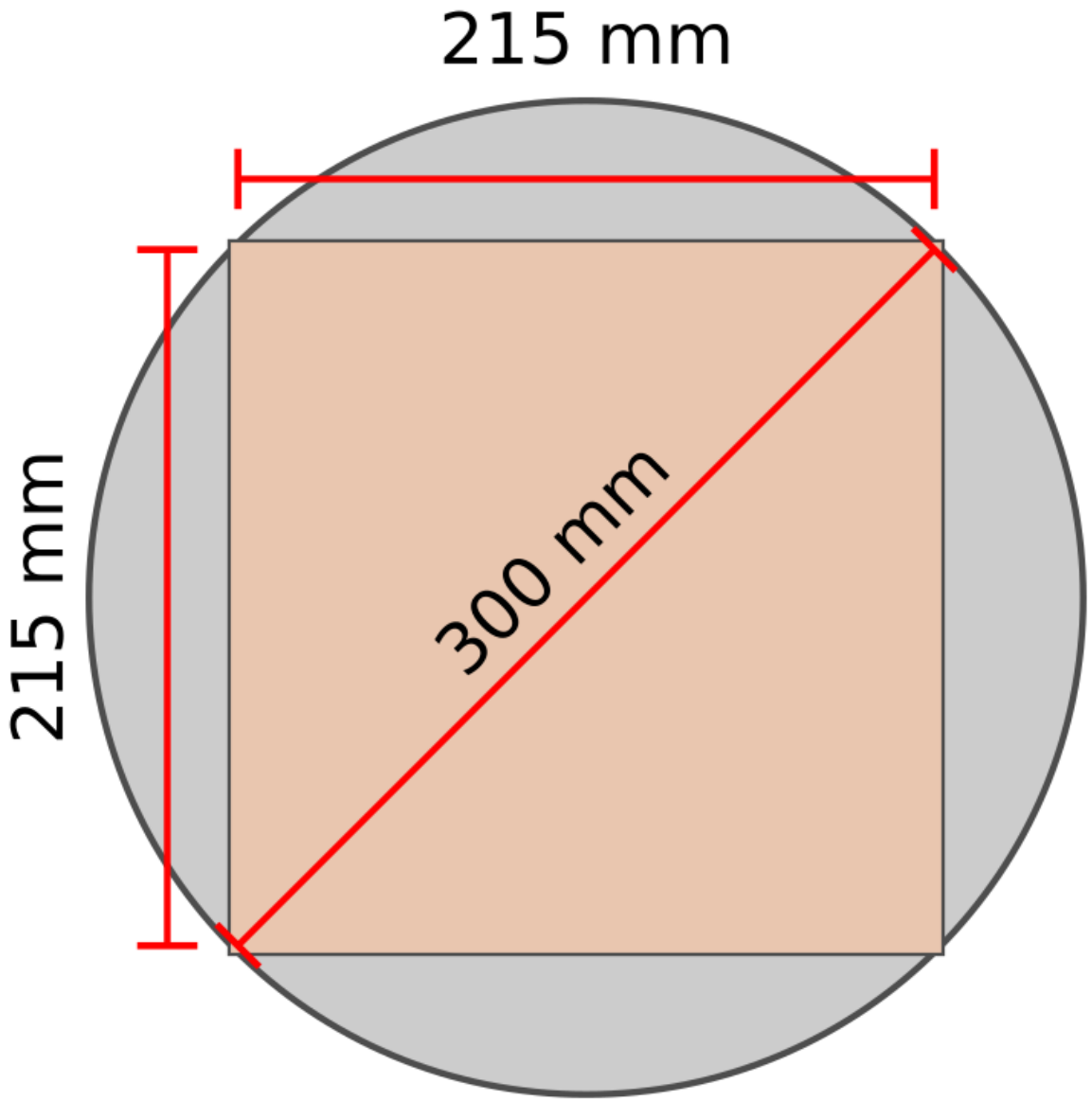
215 mm
215 mm
300 mm

WSE-1

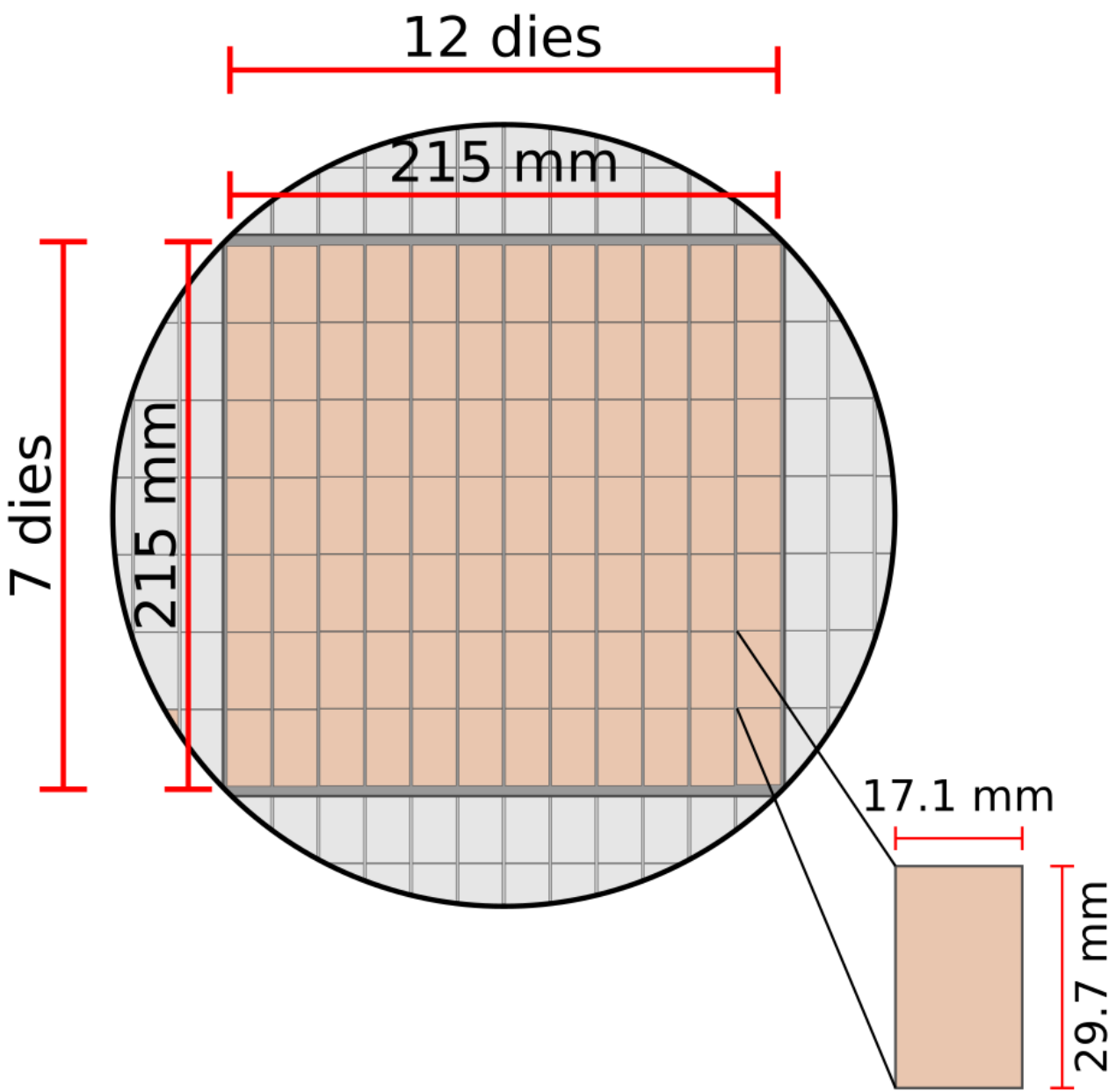

The chip comprises 84 identical dies arranged as 7*12.

Each die is ~510 mm², with 4,774 integrated tiny AI cores.

Thus, 400,000 cores + 1.5% redundancy

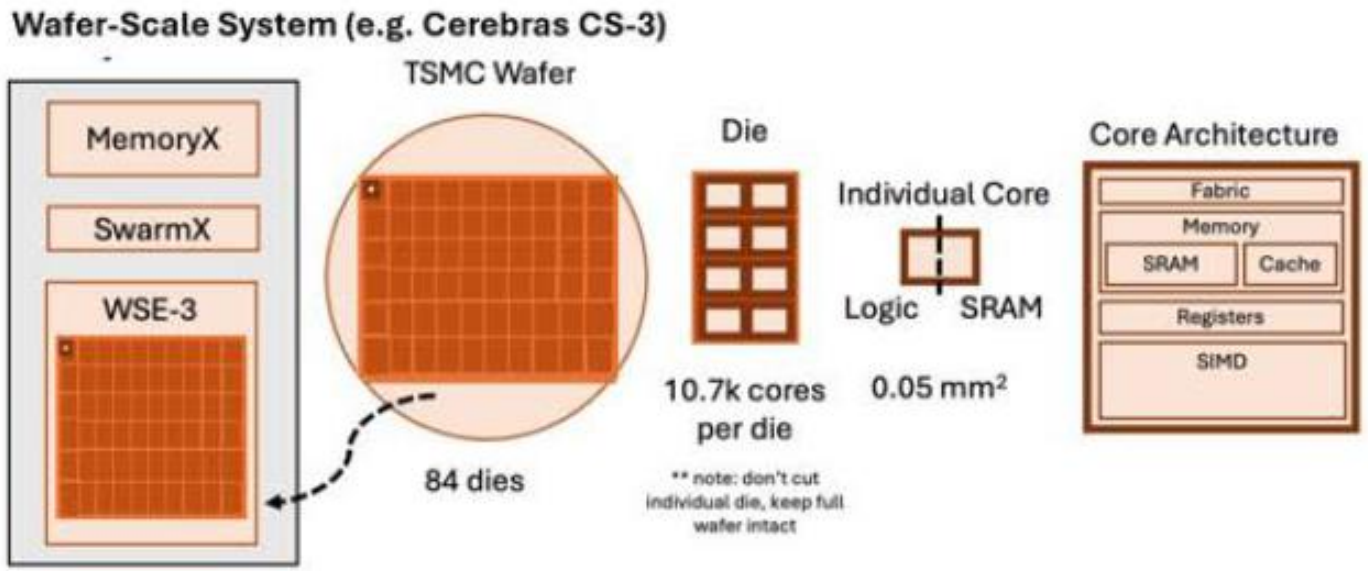
Wafer-Scale System (e.g. Cerebras CS-3)
MemoryX
SwarmX
WSE-3
TSMC Wafer
84 dies
Die
10.7k cores per die
** note: don't cut individual die, keep full wafer intact
Individual Core
Logic
SRAM
0.05 mm²
Core Architecture
Fabric
Memory
SRAM
Cache
Registers
SIMD

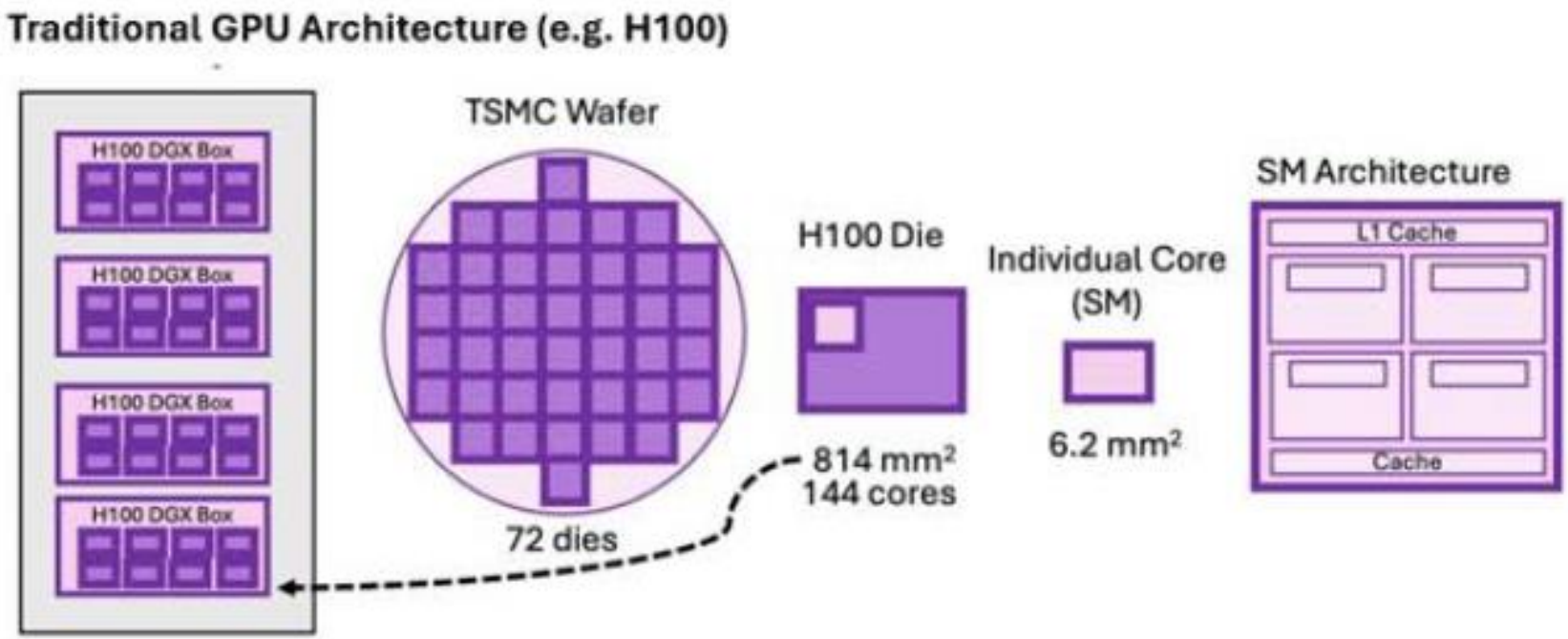
Traditional GPU Architecture (e.g. H100)
H100 DGX Box
H100 DGX Box
H100 DGX Box
H100 DGX Box
TSMC Wafer
72 dies
H100 Die
814 mm²
144 cores
Individual Core (SM)
6.2 mm²
SM Architecture
L1 Cache
Cache

WSE architecture

Core Architecture

- **WSE has a MIMD architecture:**
  - Can program each core independently
  - Perform different operations on different data
- Each core executes its own instruction stream independently
- Each AI core is called a Sparse Linear Algebra Compute (SLAC) core
- SLAC cores never multiply by zero. All zero data is filtered out and skipped in the hardware. Instead, useful work is done in its place.
- WSE ISA has both
  - general-purposes operations such as load/store, branch, and arithmetic, and
  - tensor operations, which work on 2D and 3D tensors.

Memory architecture

- Cores are tightly connected.
- Memory is local, no shared memory
- No DRAM, but massive SRAM. High-bandwidth.
- 40 GB memory is uniformly distributed alongside the cores
- WSE-2 can keep entire DNN in on-chip memory, on same silicon as compute cores.
- ➔ all DNN parameters can be accessed at extremely high bandwidth at single-cycle latency.
- Uniform memory bandwidth across wafer

2D mesh of 400K programmable PEs

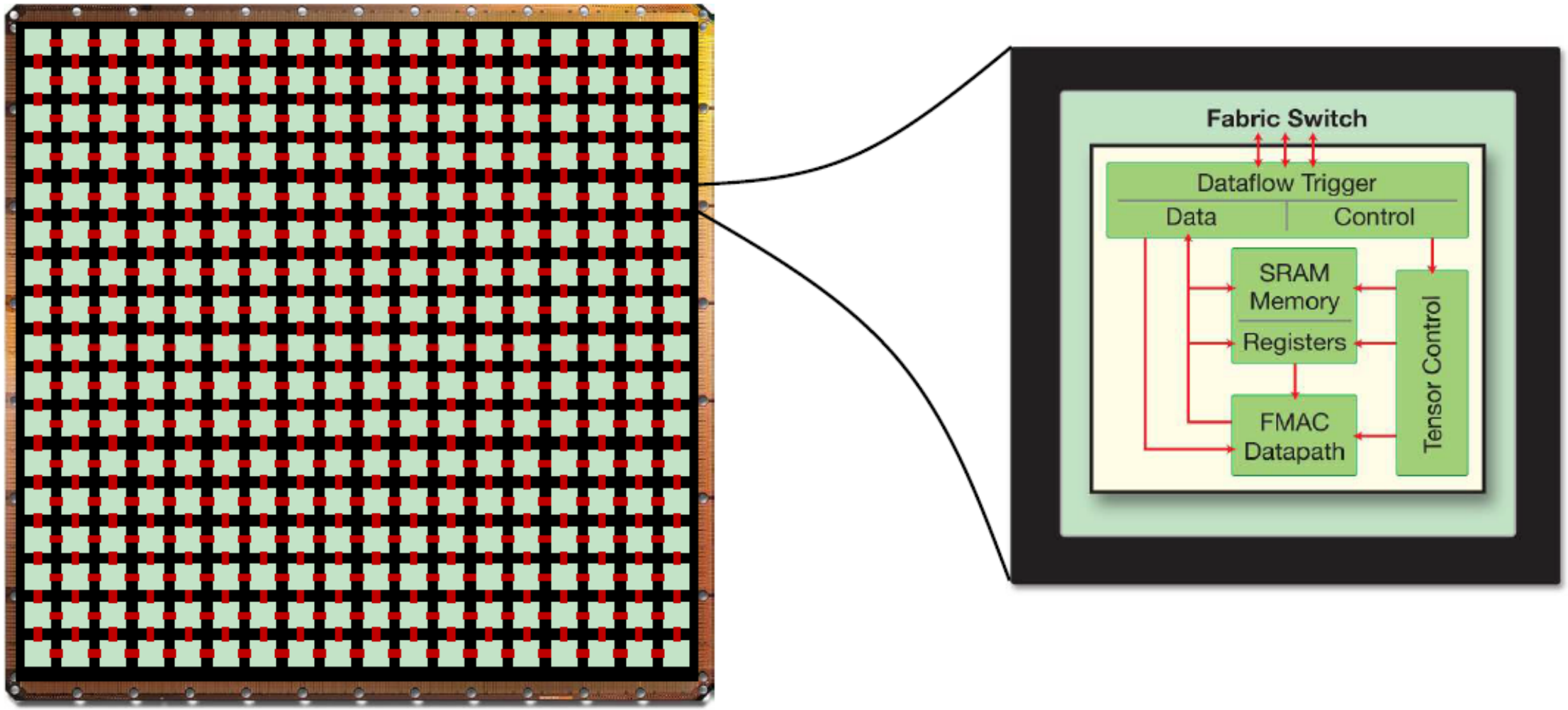

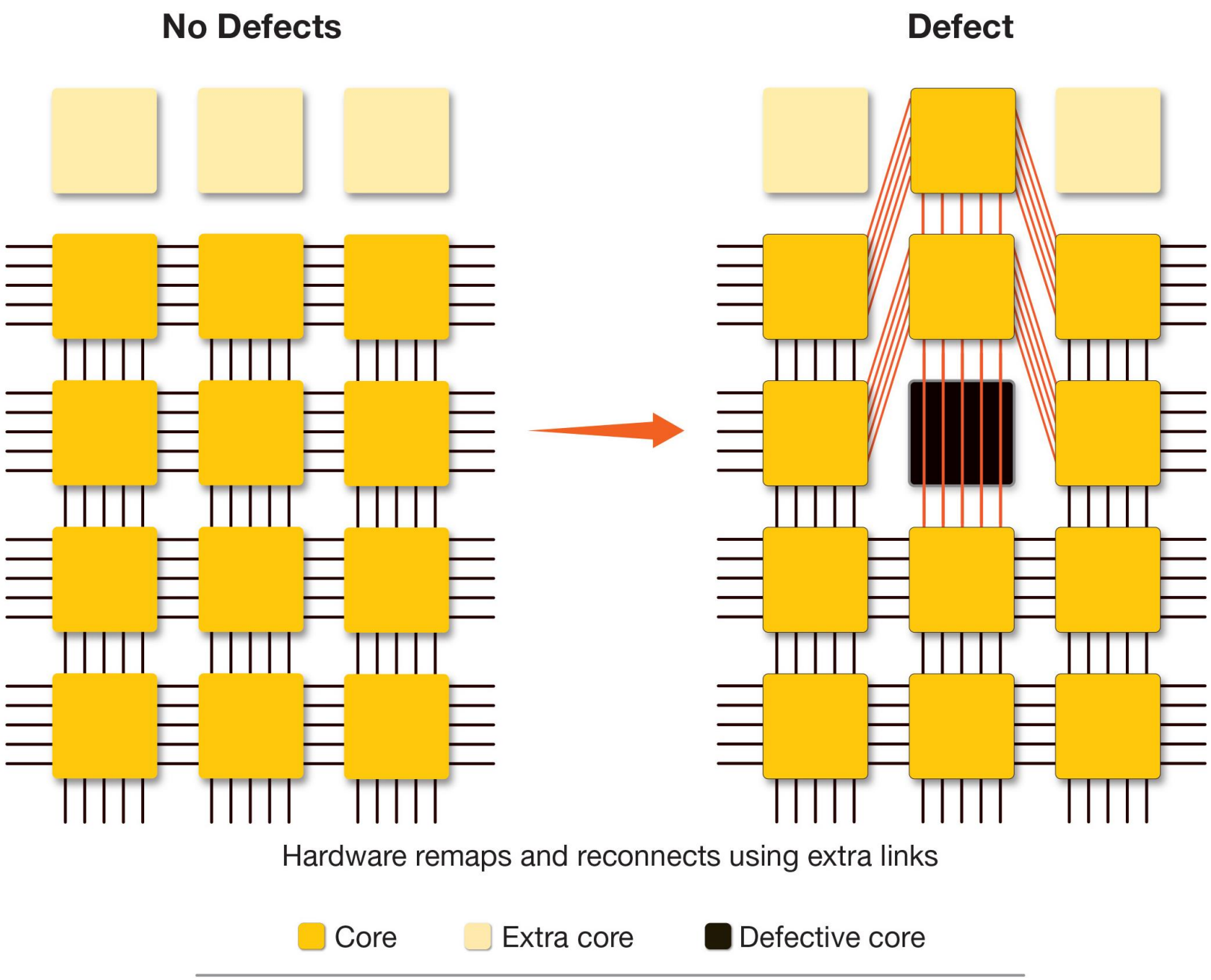

Fault-tolerance

- Cerebras achieves 100% yield by designing a system in which any manufacturing defect can be bypassed
- Initially Cerebras had 1.5% extra cores to allow for defects, but later they dropped it because TSMC's process was very mature.

Power delivery and cooling

- WSE runs at sub-threshold voltages.
- Thousands of watts delivered through power pins are stepped down to sub-threshold voltages.
- Custom power delivery and cooling technology inside the CS-2 keeps the chip running at full performance at a temperature well below operating temperature of traditional processors.
- CS-2 is internally water-cooled.
- Water circulates through a closed loop, fully self-contained within system.
- CS-2 uses water to cool the WSE-2, and then air to cool the water.

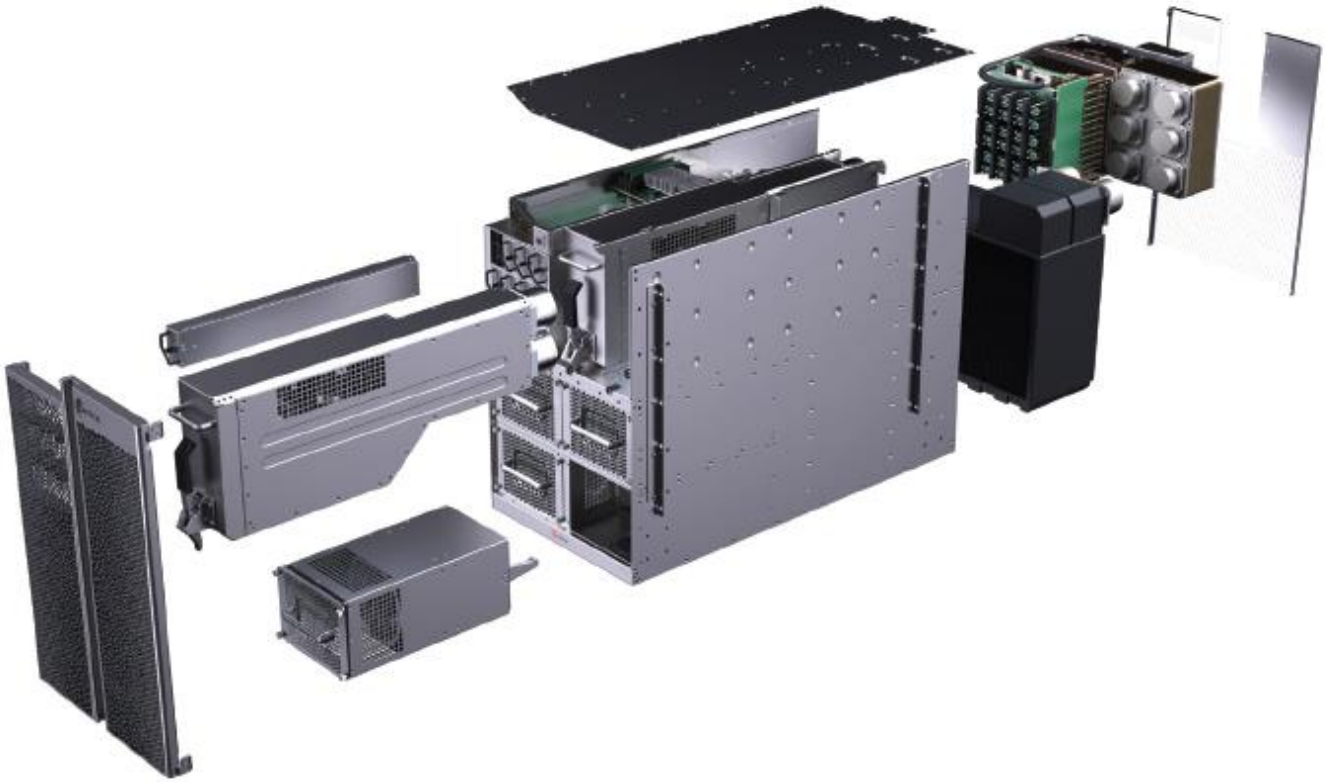

Figure 3. An inside view of the CS-2. Left to right - doors, fans, pumps, power supplies, main chassis, heat exchanger, engine block, back grill.

Software aspects

- WSE-1 Can be programmed using Tensorflow, Pytorch etc

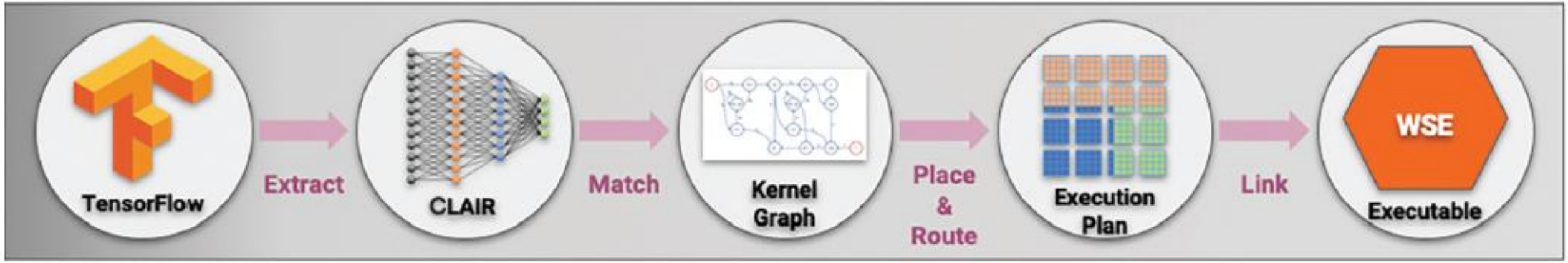

- Strong scaling is attainable for problems that fit on the wafer
  - Strong scaling: how solution time varies with #cores for a fixed total problem size
  - Weak scaling: how solution time varies with #cores for a fixed problem size per cores

Cerebras Linear Algebra Intermediate Representation (CLAIR)

Advantage of WSE over cluster of chips

- Cerebras claims that WSE is faster than any other combination or cluster of other processors.
- Running a model designed for one GPU on many GPUs is not straightforward.
- It requires thinking about memory size, memory bandwidth and communication overheads. This reduces performance and accuracy.

CS-2: Cluster-scale acceleration, Ease of a single node

No need for:

- Figuring out how to distribute your model across many GPUs
- Using Distributed TF, PyTorch
- Dealing with device memory size, memory bandwidth constraints, communication and synchronization overheads
- Using Horovod, OpenMPI
- Dealing with drops with accuracy and performance
- Hyperparameter tuning to converge at large batch size
- Re-tuning brittleness for new experiments
- Optimizing training time-to-accuracy by tuning batch size, learning rate, number of devices, layer sizes

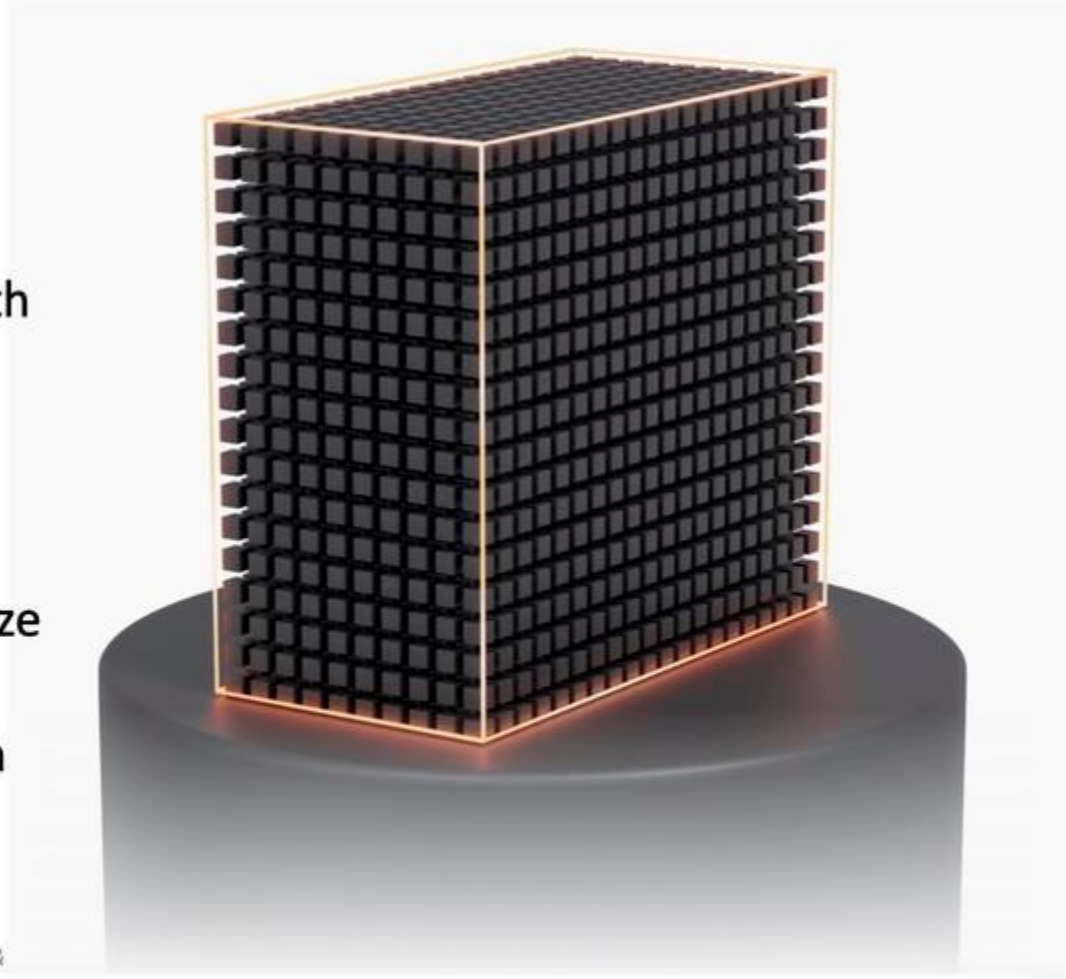

Copyright © 2020 - Cerebras Systems Confidential &

Comparison with GPU etc.

WSE-2 vs NVIDIA A100

	Cerebras WSE-2	A100	Cerebras Advantage
Chip size	46,225 mm^2	826 mm^2	**56 X**
Cores	850,000	6,912 + 432	**123 X**
On chip memory	40 Gigabytes	40 Megabytes	**1,000 X**
Memory bandwidth	20 Petabytes/sec	1,555 Gigabytes/sec	**12,862 X**
Fabric bandwidth	220 Petabits/sec	600 Gigabytes/sec	**45,833 X**

System-level comparison

Cerebras WSE vs Nvidia DGX	
Cerebras WSE-1 Box	**Nvidia DGX-2**
?	$399,000
~17.5 Kw*	10 Kw
84 dies (x57 V100 Si area)	16 x V100
16 nm	12 nm (~ same as 16 nm)
No off-chip transfer	12 NVSwitches
18 GiB SRAM	96 MiB SRAM (L2)
No off-chip memory	512 GiB
>400,000 AI cores	81,920 CUDA Cores, 10,240 Tensor Cores

Comparison with a supercomputer

- The Joule Supercomputer costs tens of millions of dollars to build, with 84,000 CPU cores spread over dozens of racks, and it consumes 450 kilowatts of power.
- CS-1 was also 200 times faster than the Joule Supercomputer, which is No. 82 on a list of the top 500 supercomputers in the world.

References

- https://www.anandtech.com/show/14758/hot-chips-31-live-blogs-cerebras-wafer-scale-deep-learning
- https://www.cerebras.net/cerebras-wafer-scale-engine-why-we-need-big-chips-for-deep-learning/
- https://arxiv.org/pdf/2010.03660.pdf
- https://www.nextplatform.com/2022/11/16/cerebras-wants-its-piece-of-an-increasingly-heterogenous-hpc-world/