Groq's Tensor Streaming Processor (TSP)

Sparsh Mittal

Key idea

- Instead of using multi/many-core architecture, use a single gigantic core.
- The single-core design is ideally suited to real-time cloud services that require low-latency inferences.

- General-purpose processors moved to multicore design in ~2004.
- The challenge in creating a single large CPU is that clock skew makes it difficult to synchronize operations.
- How does Groq solve this challenge?

Solution: Asynchronous design

- TSP allows instructions to ripple across processor, executing at different times in different units.
- Instructions flow first into a set of function units called Superlane 0, which executes these instructions.
- In the next cycle, they execute in Superlane 1, while Superlane 0 executes a second group of instructions.
- This simplifies design and routing, avoids need for synchronization, and is scalable

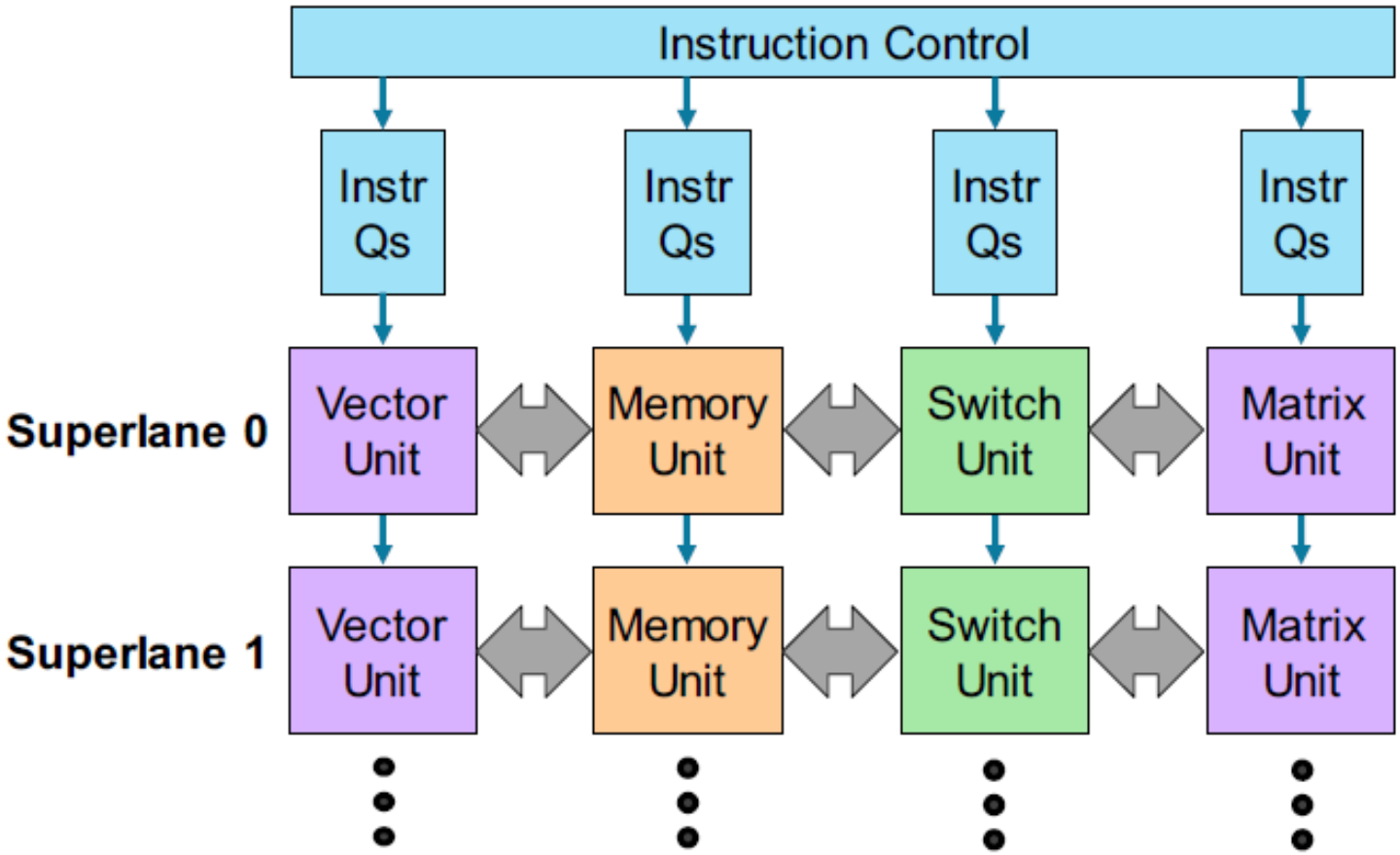

Figure 1. TSP conceptual diagram. In this new architecture, instructions flow downward through identical function units, pipelining the operations. Data flows across the processor, allowing the program to perform different operations.

Dataflow

- In each superlane, data flows horizontally.
- TSP continually pushes data across the chip on every clock cycle.
- This simplifies the routing and allows a natural flow of data during DNN calculations.

Overall architecture

- TSP has 20 superlanes, each with 16 lanes.
- Each instruction is performed on all 16 lanes at once, and then in the next superlane in the subsequent cycle, and so forth.
- Over 20 cycles, each instruction executes on all 320 lanes across the 20 superlanes
- Effectively, it becomes a 320-byte SIMD operation having a 20-cycle pipeline.
- Datatypes supported: INT8, INT16, INT32, FP32, FP16
  - ➔suitable for both training and inference

Block diagram

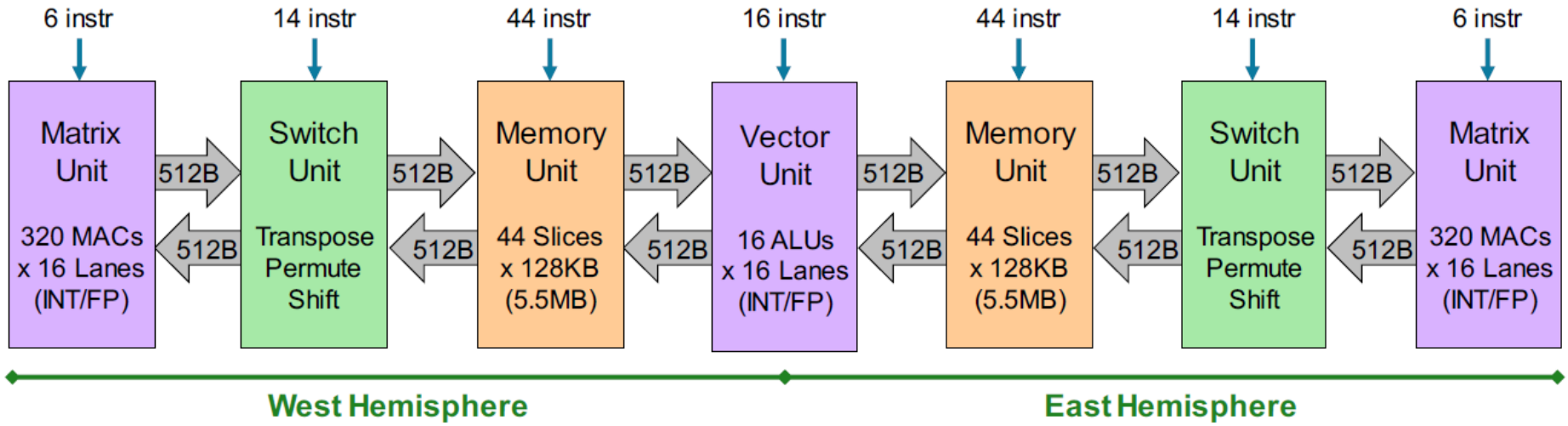

Figure 2. TSP superlane block diagram. Every superlane is bilaterally symmetric with an east side and a west side. It contains 16 lanes, each of which is 8 bits wide. Data flows from east to west and from west to east.

Vector unit

- Has 16 ALUs per lane.
- Each ALU can perform 32b calculation using groups of four stream bytes as operands.
- It can do arithmetic and logical operations, ReLU, normalization, reciprocal square root and exponentiation.

Matrix unit

- It handles heavy computations!
- Each unit has 320 MAC units per lane.
- A MAC unit has two 8b weight registers and two 32-bit accumulators.
- In each cycle, it multiplies stored weight values with a pair of activation values from the streaming data.
- Each hemisphere has 320x320 MAC units producing
  - 409,600 INT8 operations per cycle or
  - 102,400 FP16 operations per cycle.
- Using all 32 streams in each direction, TSP can load all 409,600 weight registers in less than 40 cycles.

Switch unit and memory unit

- **Switch units** can reshape tensor data to better suit the compute units; rotation, transpose, padding, etc.
- Each **memory unit** has 5.5MB SRAM: 44 banks, each 128KB.
- It can perform two 16B reads and two 16B writes per cycle, if accesses are to different banks.
- This allows both sourcing and sinking data in two directions (east and west) across all lanes in a superlane.
- With 20 superlanes, there is 110MB of SRAM per hemisphere.

Memory unit [continued]

- Memory units also store VLIW instructions, which are 2,304 (144x16) bytes wide.
- The program fetches instructions when memory units are idle
- Instruction fetches require less than 10% of the total SRAM bandwidth.
- Instructions are decoded and loaded into queues, allowing the program to prefetch.

On-chip memory

- Memory is embedded with function units, providing a high-bandwidth data source
- This, along with large SRAM size avoids the need for external memory
- Hence, TSP lacks DRAM controllers and interfaces.
- TSP has a x16 PCI Express Gen4 interface to connect to the host processor.

Need of a complex Compiler

- TSP has no caches, branch prediction, etc.,
- Hence, it's fully deterministic: one can calculate throughput even before running an app on the chip.
- However, this places a heavy burden on compiler, which must
  - comprehend twin pulses of instruction flow and data flow while optimizing function-unit utilization.
  - Schedule all data movement, manage memory and function units, and
  - manually fetch instructions.

“Core”

- Entire TSP executes a single instruction stream, hence, we call it a single core.
- But effectively, it is a 144-wide VLIW architecture, issuing one gross instructions per cycle to control the superlane.
- A superlane has two mirrored function units divided into east & west hemisphere

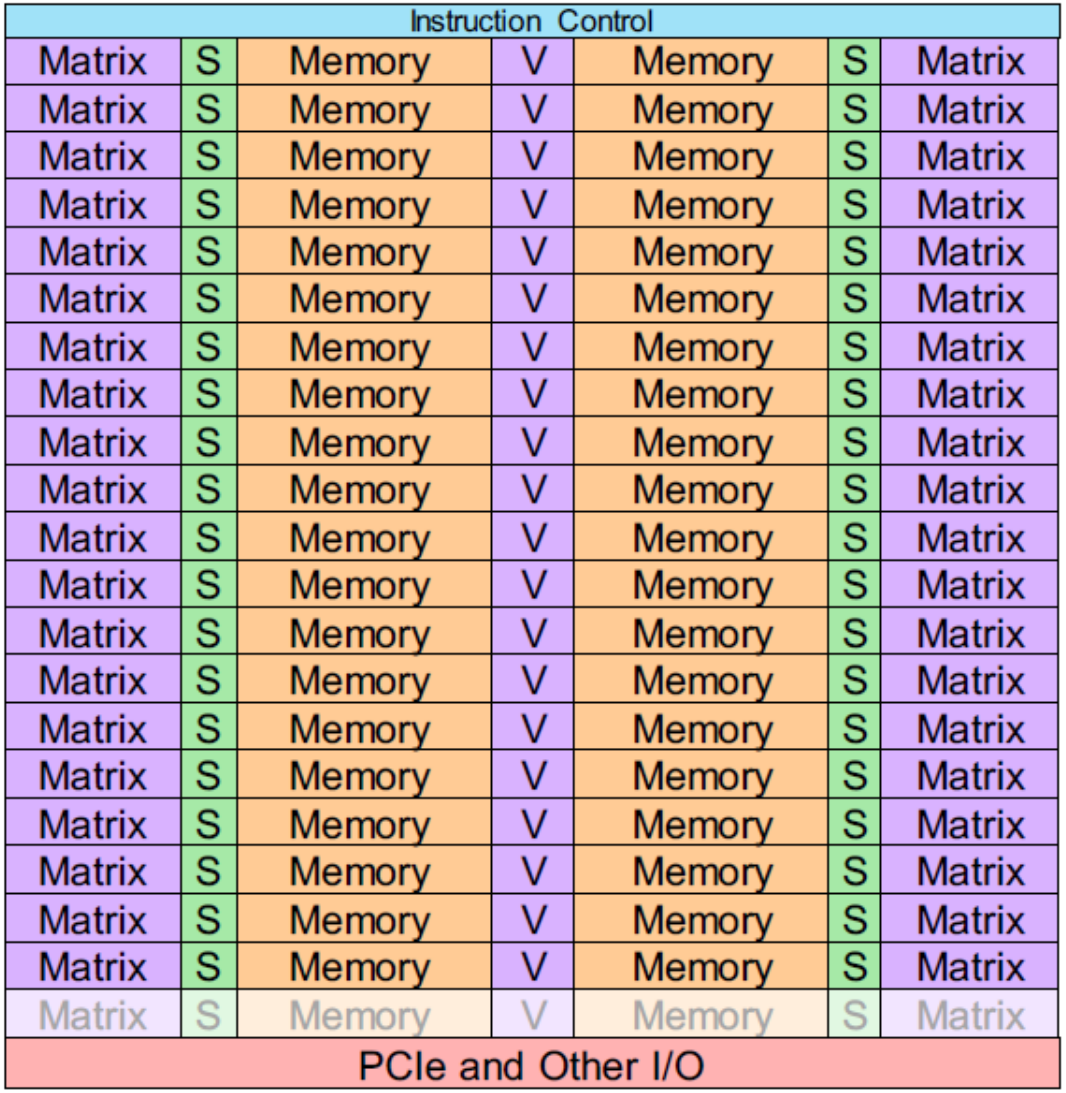

Figure 3. Groq TSP die layout. Built in 14nm CMOS, the 725mm² chip has 20 superlanes plus an extra superlane for redundancy. Instruction control requires only 3% of the die area. Diagram not to scale.

For comparison:
TPU spends 2% for control logic

Die photo

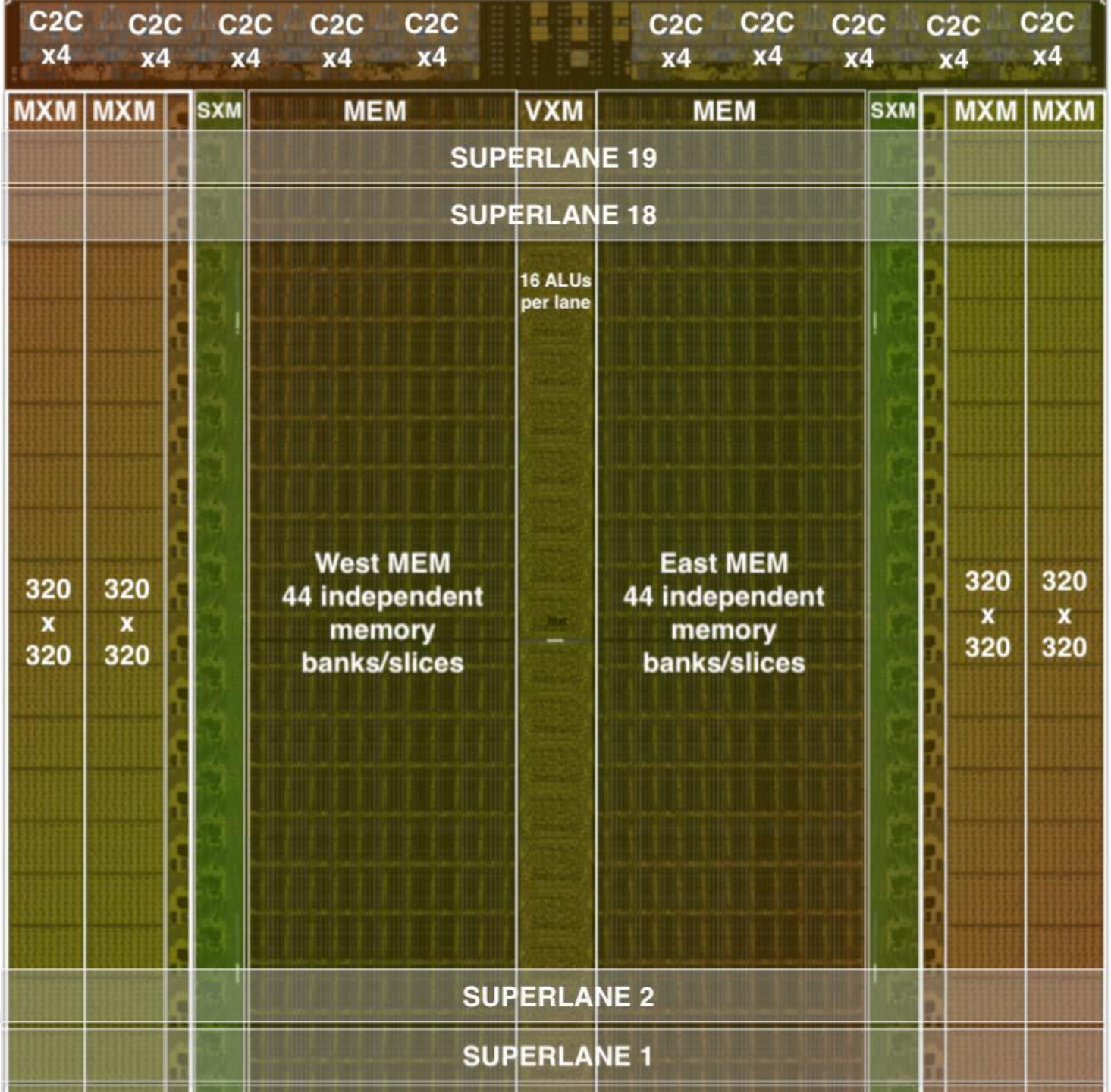
C2C x4
C2C x4
C2C x4
C2C x4
C2C x4
C2C x4
C2C x4
C2C x4
C2C x4
C2C x4
MXM
MXM
SXM
MEM
VXM
MEM
SXM
MXM
MXM
SUPERLANE 19
SUPERLANE 18
16 ALUs per lane
320 x 320
320 x 320
West MEM 44 independent memory banks/slices
East MEM 44 independent memory banks/slices
320 x 320
320 x 320
SUPERLANE 2
SUPERLANE 1

Reliability

- SRAM is ECC-protected
- Superlane applies ECC across all 16 lanes
- There is an extra superlane that's normally unused, but it can map into the system to replace a faulty superlane
  - This improves yield for such a large die while adding only 4% to the die area.

Comparison with TPU

- Compared with TPU, TSP's heterogeneous function units provide more flexibility
- TSP's 320x320 MAC array is bigger than TPU's array (256*256 in TPUv1 and 128*128 in later versions)

Heterogeneous computing approach

- Goya has TPC and GEMM engine for accelerating different types of workloads.
- IBM's Power 10 CPU has a Matrix co-processor
- Intel's Sapphire Rapids has a Tile Matrix Multiply (TMUL) unit
- NVIDIA Volta GPU has CUDA and tensor cores
- Intel's Xeon Phi has scalar and vector computing engines
- Groq's TSP has vector and matrix units
- Grayskull has a SIMD vector engine and a matrix/tensor engine

Results

Which accelerator is optimized for Batch-size of 1

Batch-size of 1	Higher Batch size
Microsoft's Brainwave	GPU
Intel Habana's Goya	TPU
Untether's TsunAImi	Cerebras WSE
Alibaba's HanGuang	Graphcore's IPU
Groq's TSP	

	Groq TSP	Nvidia V100	Graphcore C2
Core Count	1 core	80 cores	2x 1,216 cores
Max Clock Freq	1.0GHz*	1.5GHz	1.6GHz
Peak Tflop/s (FP16)	205Tflop/s	125Tflop/s	250Tflop/s
Peak TOPS (INT8)	820 TOPS	250 TOPS	Not applicable
Chip Memory	220MB	20MB†	2x 300MB
Board Memory	None	32GB HBM2	None
Host Interface	PCIe Gen4 x16	PCIe Gen3 x16	PCIe Gen4 x16
Board Power (TDP)	300W	300W	300W
ResNet-50 Inference	20,400 IPS	7,907 IPS	Undisclosed
ResNet-50 Latency	0.04ms	0.87ms	Undisclosed
IC Process	14nm	TSMC 12nm	TSMC 16nm
Die Area	725mm^2	815mm^2	2x 806mm^2
Production	Mid-2020‡	4Q17	4Q19†

Table 1. Deep-learning-accelerator comparison. Even though all three designs consume similar die area and power, the TSP stands out in both peak performance and ResNet-50 throughput. *Final product speed could be higher; †register-file capacity. (Source: vendors, except ‡The Linley Group estimate)

Core count affects the software's complexity!

- Graphcore's compiler must divide a single neural network into thousands of tasks that can be allocated among the many tiny cores.
- TSP compiler can instead run a single task on the TSP, although it must still allocate work across the many parallel function units.
- Nvidia Volta takes a middle road with 80 cores of moderate complexity

Memory comparison

- **V100** has somewhat small on-chip memory (256KB of registers per core and 6MB of shared cache)
  - ➔it needs an expensive high-speed memory subsystem.
- **TSP** avoids most of the hardware-scheduling logic and relies on short data connections instead of registers
- Hence, TSP has much larger memory and compute performance than V100 within similar die area and power.
- **IPU** is optimized for FP performance, and the two-chip card achieves slightly better flop/s than TSP at the same power, but requires 2X area.
- For integer-based inference tasks, TSP has much higher throughput than IPU

ResNet results

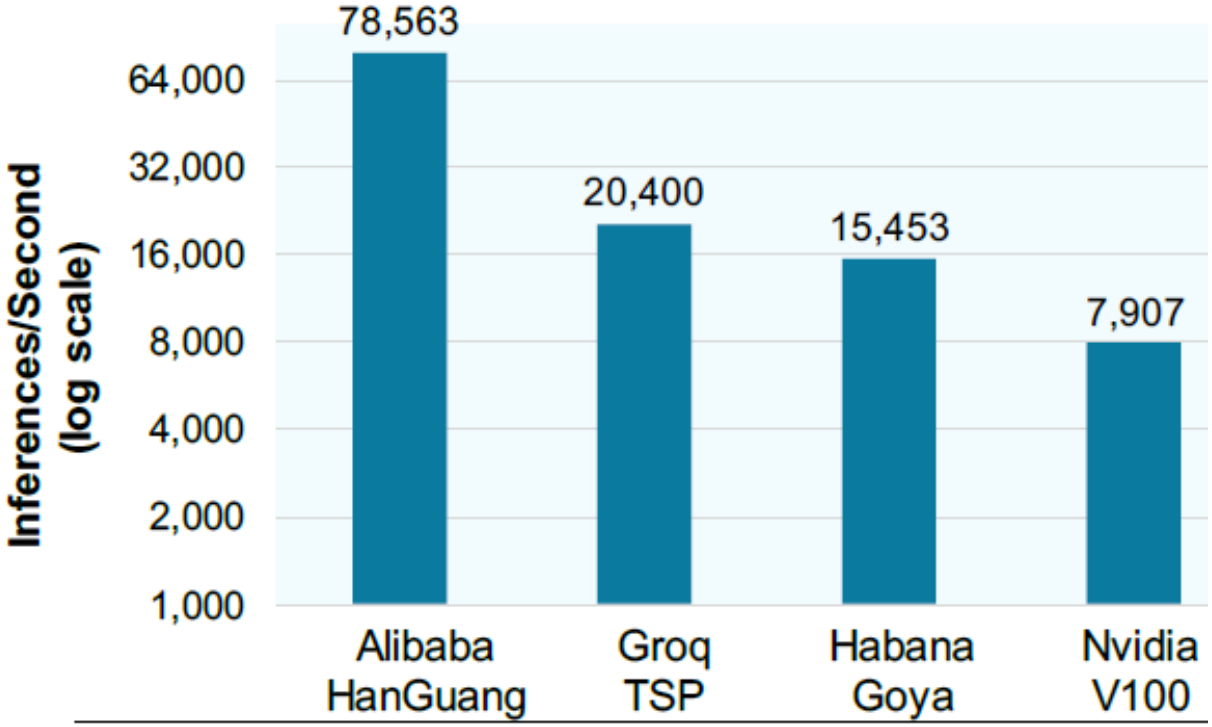

Comparison on Ops/sec/transistor

	TSP	V100 GPU
Transistors	26.8B	21.1B
Area (mm^2)	725	815
Node	14nm	12nm
Peak performance	820 TeraOps/sec	130 TeraFlops (FP16)
Ops/sec/transistor	30,000	6200

Areas of possible improvement

- They need to evaluate their chip for wider range of models.
- TSP hardware is deterministic, but throughput depends on the compiler's ability to optimally schedule operations. It requires extensive static scheduling.
- Software needs to manage a 144-wide statically scheduled VLIW machine comprising 320-byte SIMD units.
- Achieving full utilization of large MAC arrays is challenging.

References

- https://www.nextplatform.com/2020/09/29/groq-shares-recipe-for-tsp-nodes-systems/
- https://groq.com/groq-tsp-leads-in-inference-performance/
- https://groq.com/technology/
- https://groq.com/wp-content/uploads/2020/06/ISCA-TSP.pdf
- “GROQ ROCKS NEURAL NETWORKS”, By Linley Gwennap, 2020