TensTorrent's Grayskull An Inference Processor

Sparsh Mittal

Grayskull accelerator

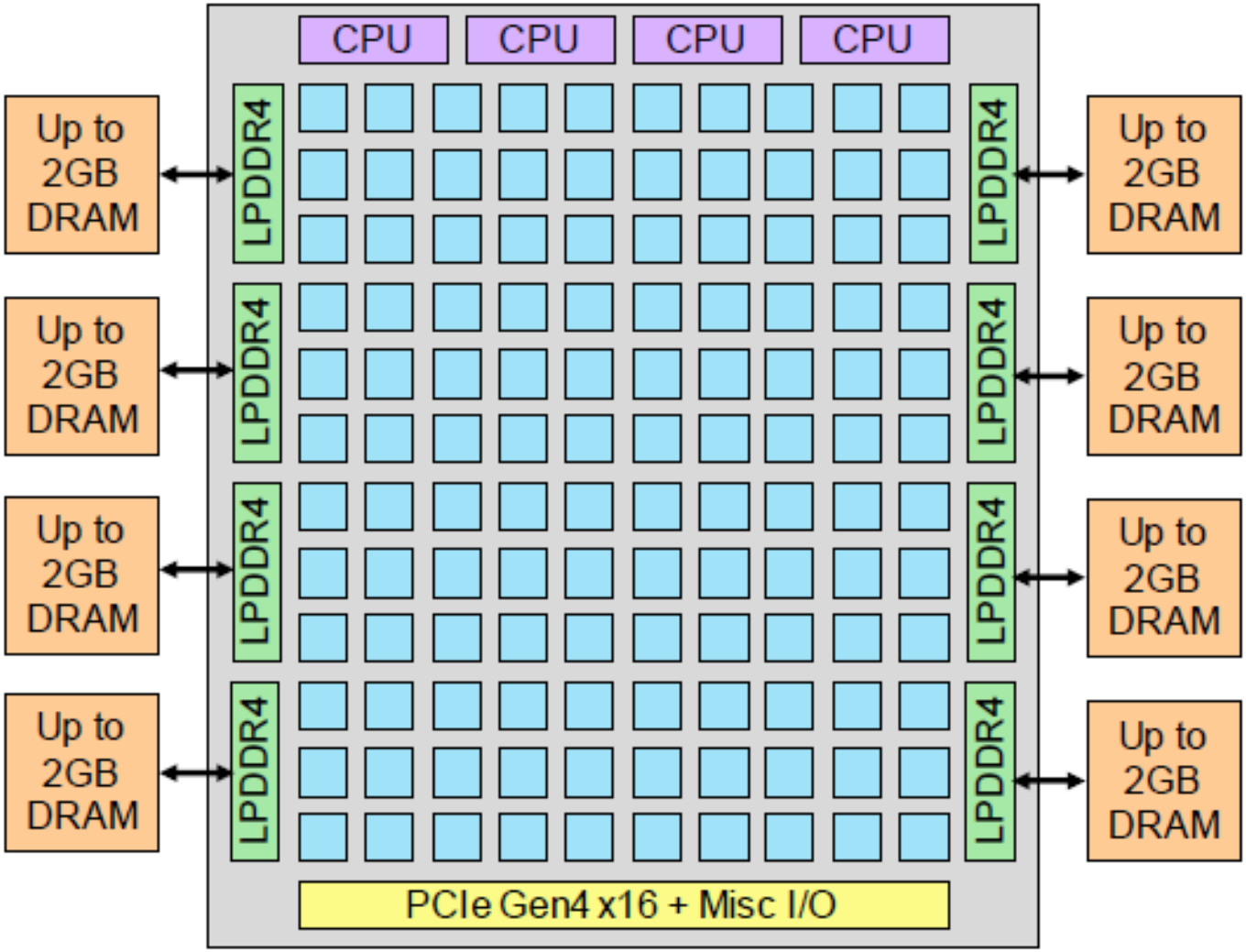

12x10 array of Tensix cores

Big picture

- Grayskull connects to host processor through a 16-lane PCI Express Gen4 interface that can operate at 32GB/s.
- Even including DRAM and other components, Grayskull fits within 75W limit of a bus-powered PCIe card.
- Peak performance of 368 INT8 TOPS.

- Manufactured in Global Foundries' 12nm technology.

Superscalar CPUs

- It has four superscalar Synopsys ARC CPUs
- They manage overall data flow
- CPUs handle special layers and functions that are poorly suited to the Tensix cores.

Tensix core

- It has five scalar RISC CPUs that can all access the packet engine,
- RISC CPUs handle scalar processing and conditional execution.
- Packet engine links to fabric interconnect, and compute engine
- Compute Engine generates 3 TOPS.

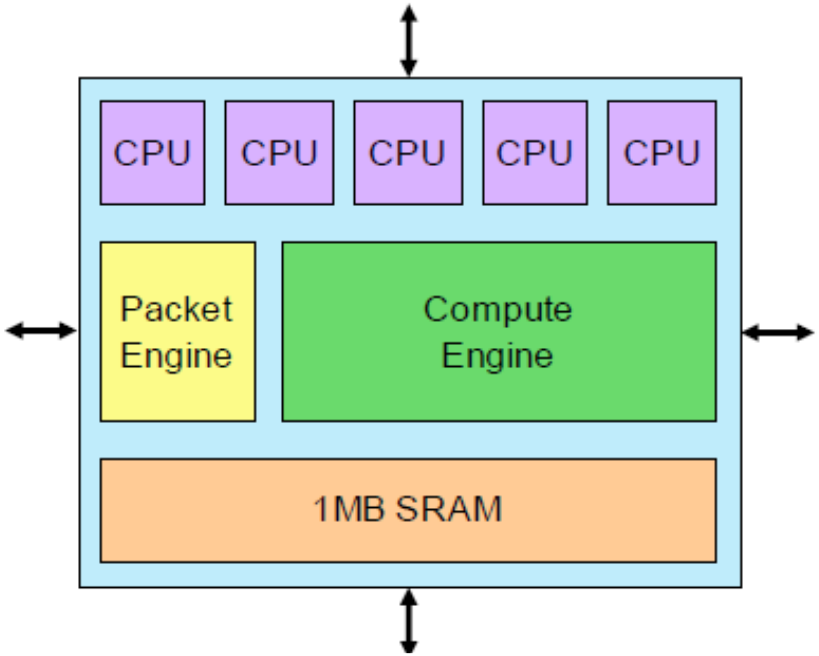

RISC CPUs (in each Tensix core)

- CPUs are programmable in C++, allowing developers to easily implement loops and conditional execution.
- These programs can also include API calls that execute vector and tensor operations using compute unit.

- CPUs execute a single instruction per cycle using a proprietary RISC instruction set.

- 5 CPUs arbitrate for access to the single compute unit. This helps in keeping compute units busy.

Core-to-core interconnect

- Each tile connects to adjacent tiles via four bidirectional connections that form a double 2D torus
  - This reduces number of hops required to move data.

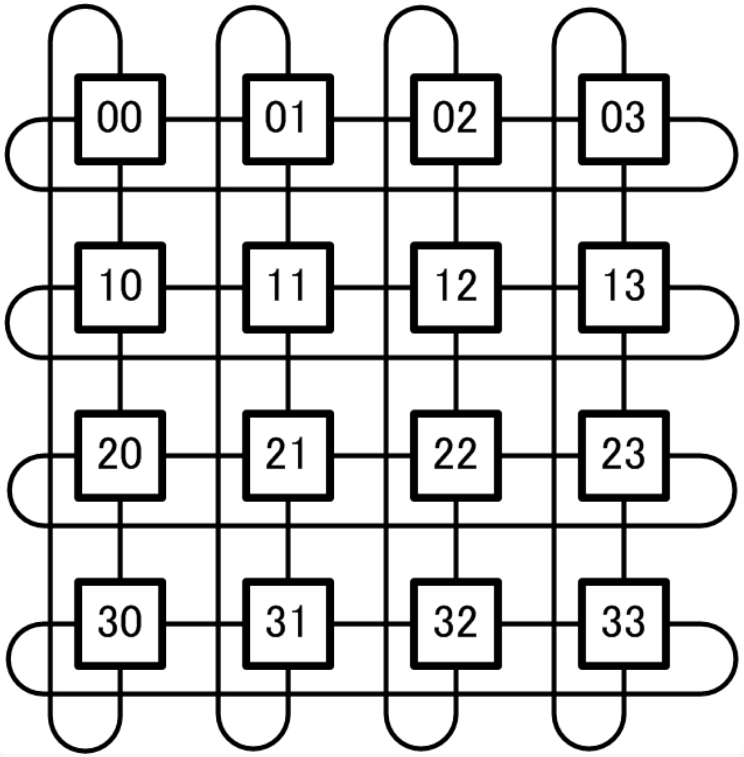

Packet engine

- Packet engine compresses data (zero values) before transferring it to torus.
  - At destination, compressed data is temporarily stored or decompressed.
  - Improves efficiency of both storage and NoC communication
- To move huge tensors, NoC uses large packets.

Compute Unit

- **Compute unit** has a SIMD vector engine and a matrix/tensor engine.
- **SIMD engine** performs basic and advanced math.
- It operates on 64 values at a time,
- It expands any of supported data types to a nonstandard FP format that can accumulate many FP16 products without losing precision.
- **Tensor engine**: accelerates both CONV and GEMM.
- It produces one set of results per cycle that can be stored in memory or redirected back into the unit for further computation.

Memory hierarchy: GPU vs Grayskull (Tensix core)

- **GPU:** large register files and multilevel caches.

- **Tensix core:** small RF and 1MB of SRAM per core
- Flat memory hierarchy that keeps data close to the compute units.
- Total 120MB on-chip memory: 5X that of V100 GPU
- Compute unit operates only on local memory and can get data from other cores using NoC

Precisions supported

- Precisions supported: INT8, FP8, FP16, BF16 and block FP format.
- Block FP format: groups of 16 values share the same 8-bit exponent

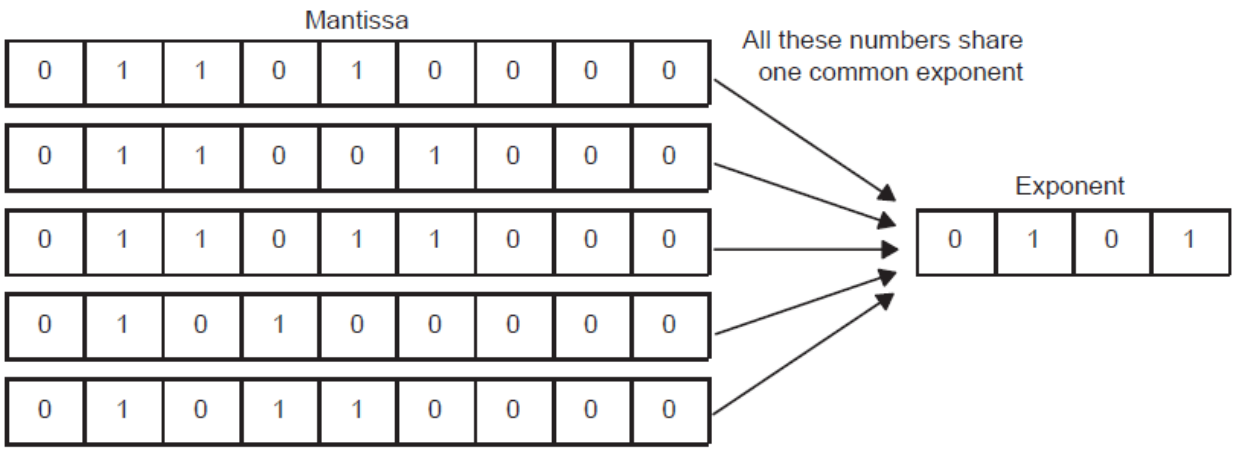

- No support for FP32: Grayskull is not primarily intended for training

DRAM memory

- NoC also connects to 8 DRAM controllers.
- Each supports a single LPDDR4-4266 chip for a maximum memory size of 16GB.
  - Reduces cost relative to a higher-bandwidth choice such as GDDR or HBM
  - Consumes less power than DDR memory
- Each chip delivers 16.5GB/s of user data for a total peak bandwidth of 132GB/s.

Summary of optimizations

- INT8, LPDDR4
- Sparsity optimization: No power wasted on ineffectual computations.
- Compressing data before transmitting it over NoC
- Larger core count improves utilization relative to monolithic designs.
- Emphasis on scalar code and conditional execution allows CNN optimization

Processors with sparsity optimizations

- Grayskull
- Hanguang
- Cerebras Wafer Scale Engine
- Untether's TsunAImi

Results

Comparison

	Tenstorrent Grayskull	Groq TSP	Nvidia Titan RTX
Core Count	120 cores	1 core	72 cores
Max Clock Speed	1.3GHz*	1.0GHz*	1.7GHz
Peak FP16 Performance	92Tflop/s	205Tflop/s	130Tflop/s
Peak INT8 Performance	368 TOPS	820 TOPS	261 TOPS
Chip Memory	120MB	220MB	18MB reg files
DRAM Channels	8x LPDDR4	None	2x GDDR6
DRAM Bandwidth	132GB/s	None	672GB/s
Host Interface	PCIe Gen4 x16	PCIe Gen4 x16	PCIe Gen3 x16
Coherent Interconnect	None	Undisclosed	NVLink
ResNet-50 Inference†	22,431 IPS	20,400 IPS	17,400 IPS‡
ResNet-50 Utilization‡	23% of TOPS	11% of TOPS	24% of TOPS
Board Power (TDP)	75W	300W	280W
ResNet-50 Efficiency	393 IPS/W	68 IPS/W	62 IPS/W
IC Process	GF 12nm	14nm	TSMC 12nm
Die Area	620mm^2	725mm^2	754mm^2
Production	2H20	Mid-2020‡	4Q18

Comparison between GPU and Grayskull

- Grayskull's chip has superficial similarity with Titan RTX (Turing).
- TOPS rating: similar for Turing core and Tensix core.
- Both core types are easily programmable and can handle a wide range of models.
- **But** GPU has far less on-chip memory, so it requires a much higher-bandwidth connection to DRAM, increasing cost and power.
- Grayskull avoids these costs, optimizes for sparsity;
- Hence, it delivers more TOPS at less than 1/3rd of total power.

Comparison between TSP and Grayskull

- Groq's TSP generates >800 TOPS.
- TSP has 220MB of onchip SRAM (~2X of Grayskull), but has no DRAM.
- TSP requires far more power and exhibits poor utilization of its peak TOPS rating.

Inference results

- On ResNet-50, Grayskull has 22,431 IPS for batch-size of 20. Higher than both GPU and TSP.
- At batch-size 1, IPS reduces to half for Grayskull and to ~20% for GPU. However, TSP is best at batch-size 1, due to its single core.

- On BERT, Grayskull improves performance by stopping after few iterations and using variable sequence lengths.
- This shows utility of Tensix's conditional execution.

Inference performance

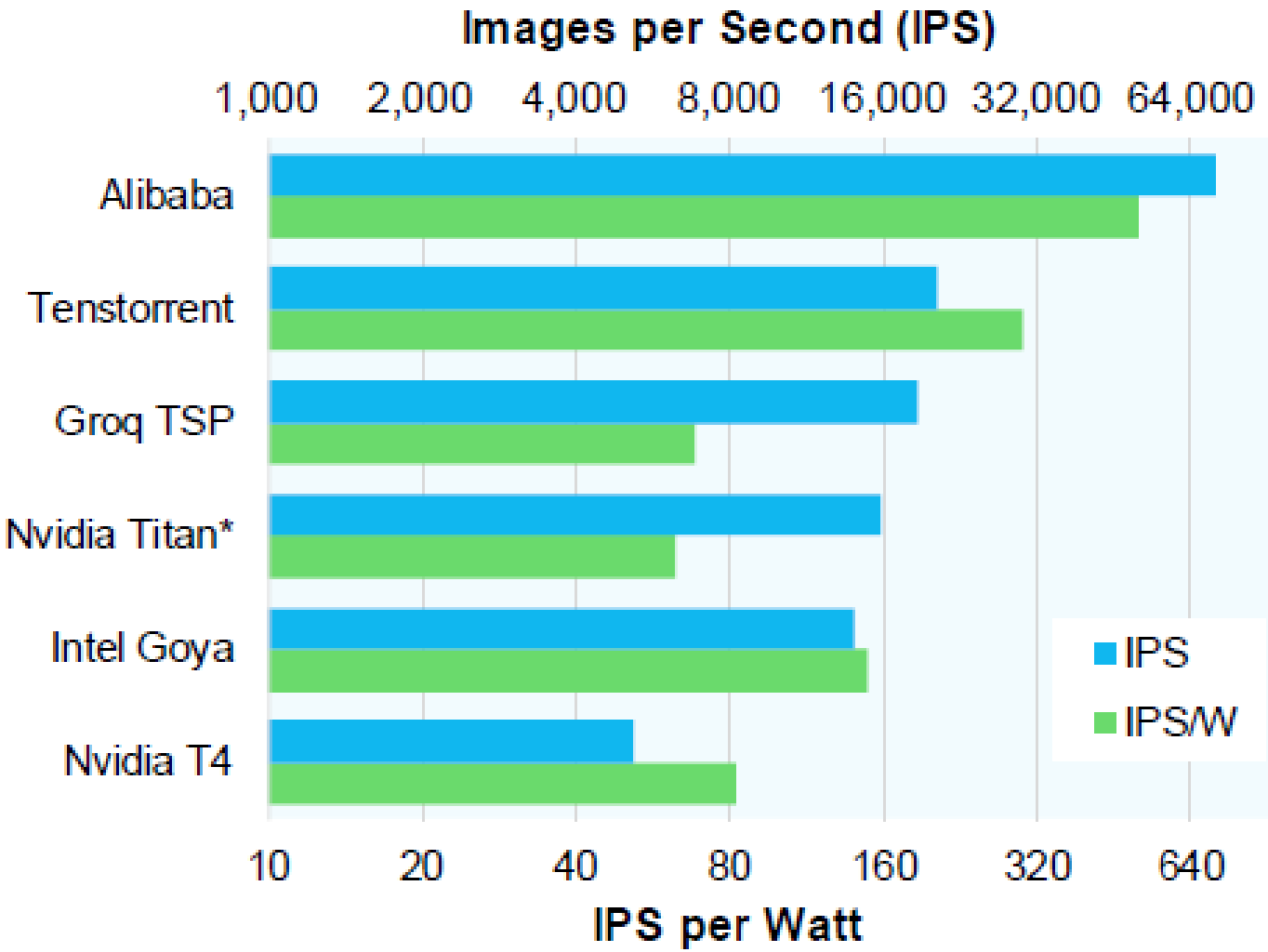

Inference performance

- For power efficiency, HanGuang is best due to its low-voltage mode
- Grayskull is 2X efficient than Goya and 4X better than Titan RTX and TSP.
- T4 GPU has same TDP as Grayskull but its power efficiency is much lower.

References

- **Tenstorrent Scales AI Performance,** *By Linley Gwennap*

- https://semianalysis.com/tenstorrent-wormhole-analysis-a-scale-out-architecture-for-machine-learning-that-could-put-nvidia-on-their-back-foot/

- https://moorinsightsstrategy.com/research-paper-tenstorrents-holistic-stack-of-ai-innovation/