Deep Learning on CPU

Sparsh Mittal

Role and Prospects of Deep Learning on CPUs

Sparsh Mittal

Motivation

- Choosing a right computing system is essential for reaping full potential of DL performance.
- Accelerators may provide higher throughput than CPUs on DL workloads, whereas they may not be optimal on other metrics.
- CPUs are also inevitably present in any system.
- Hardware/software stack of CPUs is well-established.
- Accelerators are not panacea.
- CPU has its forte!

DL—deep learning

DNNs with High Memory Requirement

- 3D CONV and even 2D CONV with large batch size requires a massive amount of memory, for example
  - a 2D CNN for classification between 101 classes has 5 million parameters
  - the same has been extended to a 3D structure having 33 million parameters.
- Accelerators have limited memory capacity.
- CPU-managed hosts in cloud and datacenter scenarios have much larger memory capacities.

CONV—convolutional, CNN—convolutional neural network

DNNs with Limited Parallelism

- Accelerators rely on massive parallelism.
- Many DL workloads do not have high parallelism.
- Parallelization of LSTM (a recurrent neural network) is challenging due to dependencies between steps and use of small batch size.

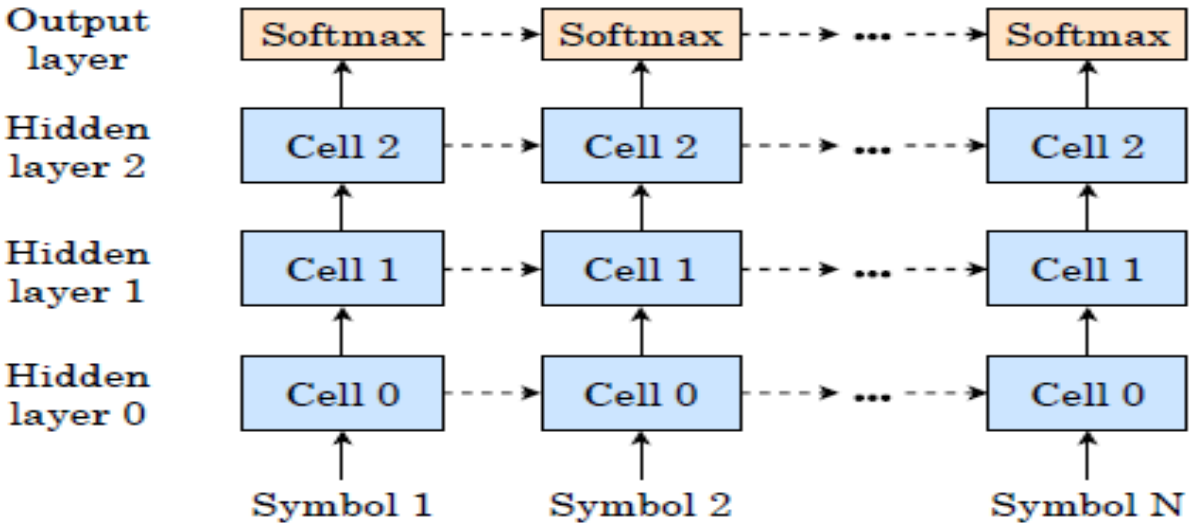

LSTM (long-short term memory)

S. Mittal et al., "A Survey on Hardware Accelerators and Optimization Techniques for RNNs", JSA, 2021

DNNs with Irregular Memory Accesses

- DNNs, for example, InceptionNet, have filter shapes of 1×1, 3×3, 1×3, and 3×1.
  - Irregular memory accesses and different degrees of parallelism across layers.
- Such applications fit naturally to CPUs, which have few fast cores.

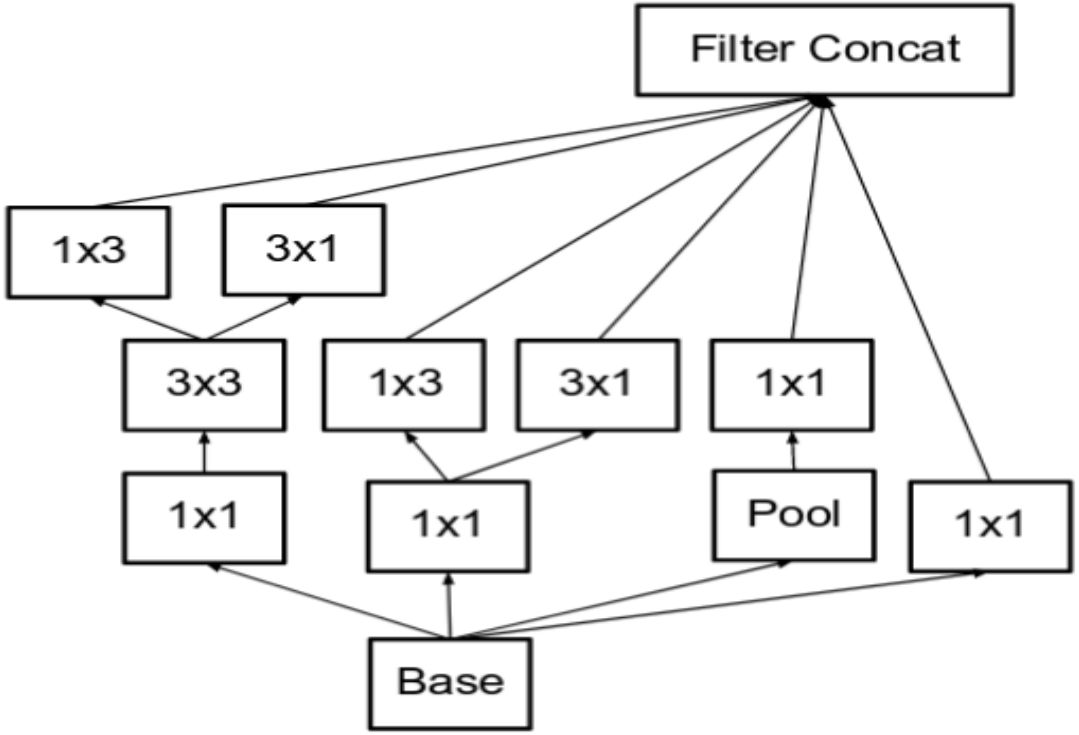

InceptionNet module

Szegedy, et al. "Rethinking the inception architecture for computer vision." CVPR, 2016.

Sparse DNNs

- They are inefficient on massively parallel processors.
  - Sparse data structures have poor spatial locality.
  - This leads to poor bandwidth efficiency.
  - They prohibit use of vectorization and cache tiling.

3	9	2	8	1	0
5	0	4	0	6	2
0	2	0	0	0	4
2	0	0	0	5	0
2	9	8	0	2	6
6	0	6	2	0	1

Original weight matrix

3	9		8		
5		4		6	
					4
				5	
	9	8			6
6		6			

Pruned weight matrix in sparse CNNs

- CPUs are effective due to their moderate parallelism and advanced memory management techniques.

Usefulness in Mobile and Embedded Systems

- In mobile domain, CPU is the most widely used computing system due to its high availability, portability, and software support.
- A mobile CPU can provide similar or higher performance than a mobile GPU.
- Most DL frameworks do not support all operations on mobile GPU or DSP.
- Unsupported computations are executed on CPUs ⇒ CPU–GPU data-transfer overheads.
- DSP has low precision.

DSP—digital signal processor, GPU = Graphic Processing Unit

Usefulness in Data Center Scenarios

- Data centers supporting web services see a huge fluctuation in computing demand over time.

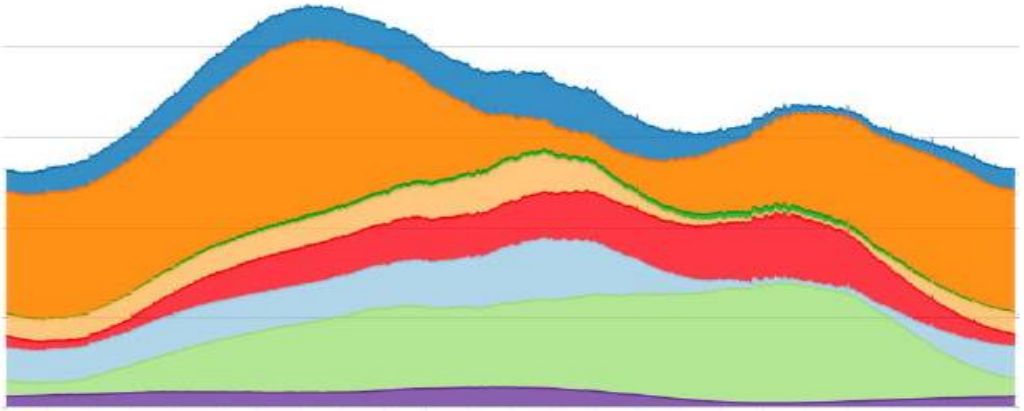

Load on Facebook's servers for 24 h on September 19, 2017

- CPUs help meet this variability due to their efficiency for both DL and non-DL tasks, and the ability to provide low-latency inference.
- This allows cloud service providers to amortize their CPU investments on a broad range of tasks

Hazelwood, et al. "Applied machine learning at Facebook: A datacenter infrastructure perspective." HPCA, 2018

Usefulness in Extreme Environments

- Harsh environments, for example, space and defense, require a high fault tolerance and security certifications.
- Radiation hardening of accelerators has not been sufficiently researched.
- Usually, only CPUs are a choice for such environments.

Challenges in Overspecialization

- For image understanding, hybrid DNNs (e.g., CNN+LSTM) are used

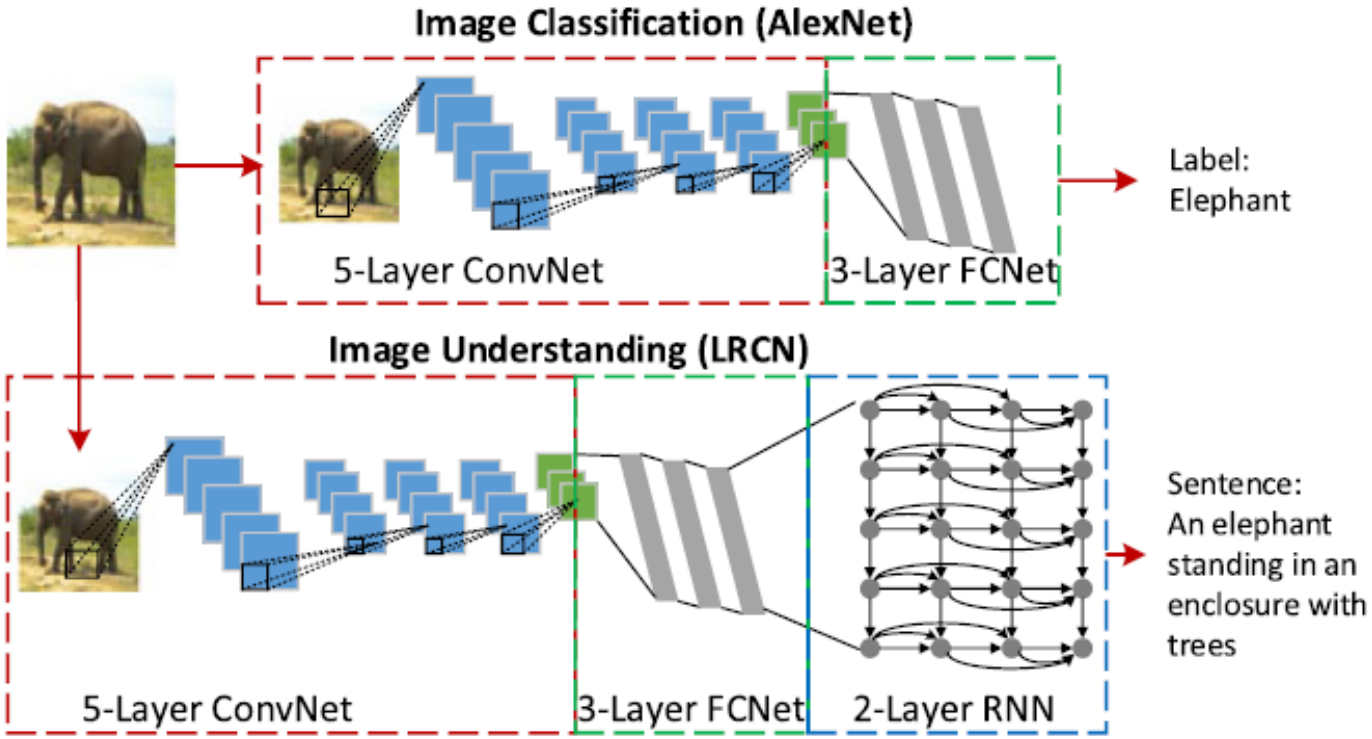

LRCN—long-term recurrent convolutional networks

Here, general-purpose design may be better than overspecialized design.

Yin, et al. "Parana: A parallel neural architecture considering thermal problem of 3d stacked memory." IEEE TPDS, 2018

Challenges in Overspecialization

IoT devices and wearables have tight power/area budgets.

- A smartwatch chip cannot host separate accelerators for speech/audio/image/video processing.
- Area of Eyeriss (an AI accelerator) is 30× than that of ARM Cortex A35 core (a general-purpose CPU).

IoT = Internet of Things

Accelerators Are Not Optimal on All Metrics

- Accelerators need long design cycles and massive investment and are difficult to use in fast-changing DL domain.
- Accelerators pose complexities of heterogeneity, custom software and programming support, and integration overheads into the existing ecosystems.
- Achieving economies of scale and business continuity is challenging.
- Upgrading entire service from CPUs to accelerators has high overhead.
- Large-scale companies can make/maintain their accelerators, but for other companies, CPUs (or GPUs) are most feasible.

Efficiency at Low Batch Size

- TPU/GPU have high throughput for large batch size.
- Strict latency constraints of real-time inference prohibit large batch size.
- CPUs can provide comparable latency at low batch sizes.
- On a cloud, accelerators have higher usage cost than CPU.

TPU—Google's tensor processing unit

Machine type	Virtual CPUs	Memory	Default* (USD)/ hour
c4-standard-2	2	7 GiB	$0.096866
c4-standard-4	4	15 GiB	$0.19767
c4-standard-8	8	30 GiB	$0.39534
c4-standard-16	16	60 GiB	$0.79068
c4-standard-24	24	90 GiB	$1.18602
c4-standard-32	32	120 GiB	$1.58136
c4-standard-48	48	180 GiB	$2.37204
c4-standard-96	96	360 GiB	$4.74408
c4-standard-144	144	540 GiB	$7.11612
c4-standard-192	192	720 GiB	$9.48816
c4-standard-288	288	1080 GiB	$14.23224
c4-standard-288-metal	288	1080 GiB	$14.23224

Cloud TPU Version	On Demand (USD)
(per chip-hour)	(per hour)
Trillium	$2.70
TPU v5p	$4.20
TPU v5e	$1.20
TPU v4 pod	$3.22
TPU v3 pod	$2.00
TPU v3 device	$2.20
TPU v2 pod	$1.50
TPU v2 device	$1.31

Model	GPUs	GPU memory	GPU price (USD) per GPU/ hour
NVIDIA T4	1 GPU	16 GB GDDR6	$0.35
	2 GPUs	32 GB GDDR6	
	4 GPUs	64 GB GDDR6	
NVIDIA P4	1 GPU	8 GB GDDR5	$0.60
	2 GPUs	16 GB GDDR5	
	4 GPUs	32 GB GDDR5	
NVIDIA V100	1 GPU	16 GB HBM2	$2.48
	2 GPUs	32 GB HBM2	
	4 GPUs	64 GB HBM2	
	8 GPUs	128 GB HBM2	
NVIDIA P100	1 GPU	16 GB HBM2	$1.46
	2 GPUs	32 GB HBM2	
	4 GPUs	64 GB HBM2	

https://cloud.google.com/tpu/pricing?hl=en
https://cloud.google.com/compute/all-pricing?hl=en
https://cloud.google.com/compute/gpus-pricing?hl=en

Some Industry Papers on DL on CPUs

Amazon

Y. Liu *et al.*, "Optimizing CNN model inference on CPUs," in *Proceedings of the 2019 USENIX Conference on Usenix Annual Technical Conference*, 2019, pp. 1025–1040.

Facebook

U. Gupta *et al.*, "The architectural implications of Facebook's DNN-based personalized recommendation," in *Proceeding of the IEEE International Symposium on High Performance Computer Architecture*, 2020, pp. 488–501.

K. Hazelwood *et al.*, "Applied machine learning at Facebook: A datacenter infrastructure perspective," in *Proceeding of the IEEE International Symposium on High Performance Computer Architecture*, 2018, pp. 620–629.

J. Park *et al.*, "Deep learning inference in Facebook data centers: Characterization, performance optimizations and hardware implications," *arXiv:1811.09886*, 2018.

C. J. Wu *et al.*, "Machine learning at Facebook: Understanding inference at the edge," in *Proceeding of the IEEE International Symposium on High Performance Computer Architecture*, 2019, pp. 331–344.

Microsoft

W. Bao *et al.*, “NGEMM: Optimizing GEMM for deep learning via compiler-based techniques,” 2019.

T. Chilimbi *et al.*, “Project Adam: Building an efficient and scalable deep learning training system,” in *Proceedings of the 11th USENIX Conference on Operating Systems Design and Implementation*, 2014, pp. 571–582.

S. Rajbhandari *et al.*, “Optimizing CNNs on multicores for scalability, performance and goodput,” in *Proceedings of the 22nd International Conference on Architectural Support for Programming Languages and Operating Systems,* 2017, pp. 267–280.

M. Zhang *et al.*, “DeepCPU: Serving RNN-based deep learning models 10× faster,” in *Proceedings of the USENIX Annual Technical Conference*, 2018, pp. 951–965.

Samsung

Y. Kim *et al.*, “µLayer: Low latency on-device inference using cooperative single-layer acceleration and processor-friendly quantization,” in *Proceedings of the 14th EuroSys Conference*, 2019, pp. 1–15.

D. Li *et al.*, “DeepRebirth: Accelerating deep neural network execution on mobile devices,” in *Proceeding of the 33rd AAAI Conference on Artificial Intelligence*, 2019.

References

- S. Mittal, P. Rajput, and S. Subramoney, “A survey of deep learning on CPUs: Opportunities and co-optimizations,” *IEEE Transactions on Neural Networks and Learning Systems*, to be published, doi: 10.1109/TNNLS.2021.3071762.
- S. Mittal and S. Umesh, “A survey on hardware accelerators and optimization techniques for RNNs,” *Journal of Systems Architecture*, vol. 112, 2021, Art. no. 101839.
- S. Mittal and Vibhu, “A survey of accelerator architectures for 3D convolution neural networks,” *Journal of Systems Architecture*, vol. 115, 2021, Art. no. 102041.

Understanding Performance Implications of LLM Inference on CPUs
https://ieeexplore.ieee.org/stamp/stamp.jsp?arnumber=10763564