Intel Habana's Gaudi: A Training Processor

Sparsh Mittal

Acronyms

- Remote Direct Memory Access (RDMA)
- RDMA over Converged Ethernet (ROCE).

Different accelerators for Training and Inference

- Nvidia has been offering distinct Tesla GPU products for training and inference
  - V100 for training and T4 for inference
- Same for Google TPU (v1 to v4)
  - V1 and V4i for inference only
  - V2, V3 for both inference and training. Dual-core V4 for training
- Same for Intel Nervana Neural Network Processor (NNP): NNP-I and NNP-T
- Wave Computing initially developed a dual-purpose architecture to address both areas, but later switched their strategy

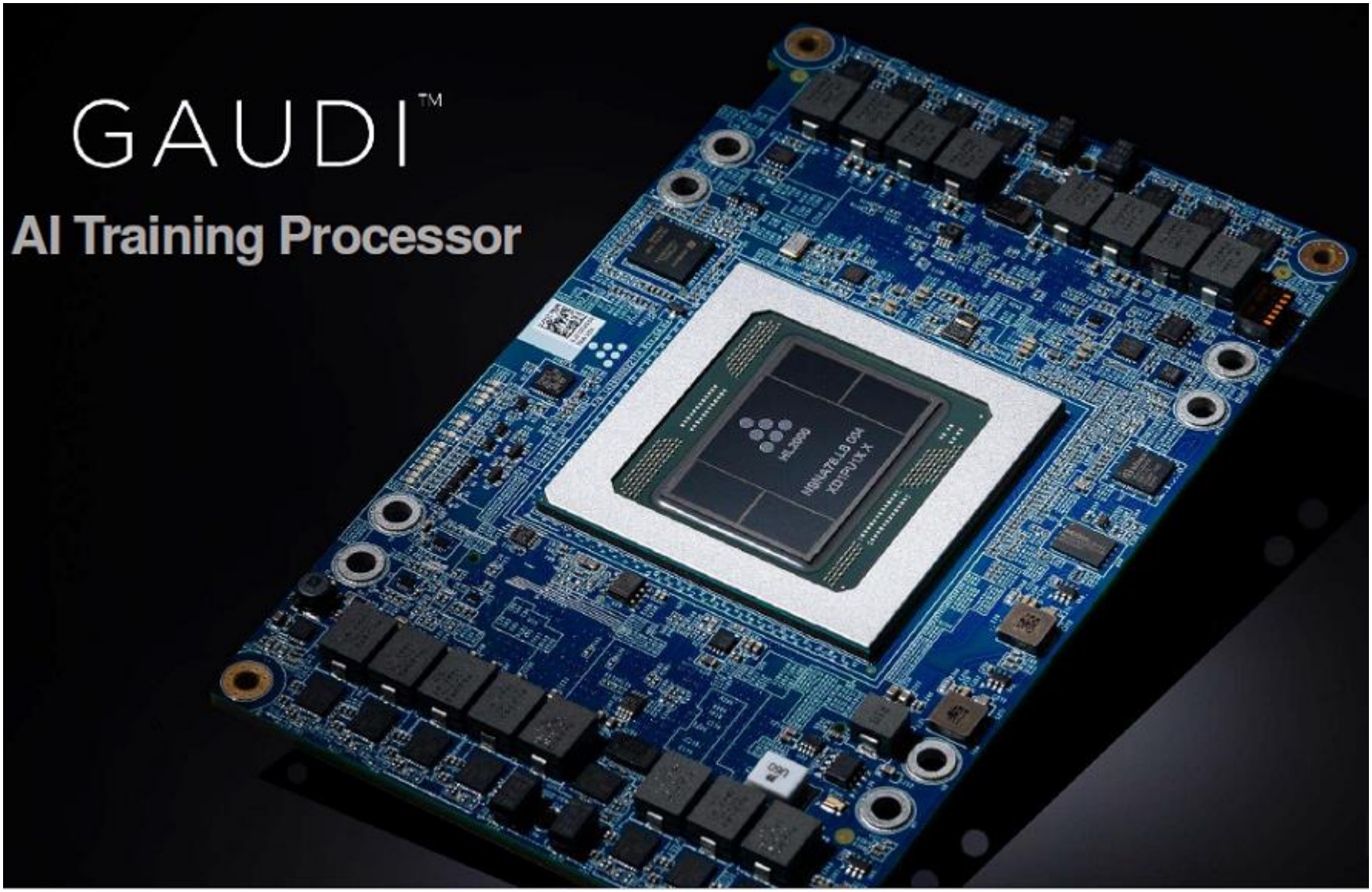
GAUDI™
AI Training Processor

Goya architecture: For Inference

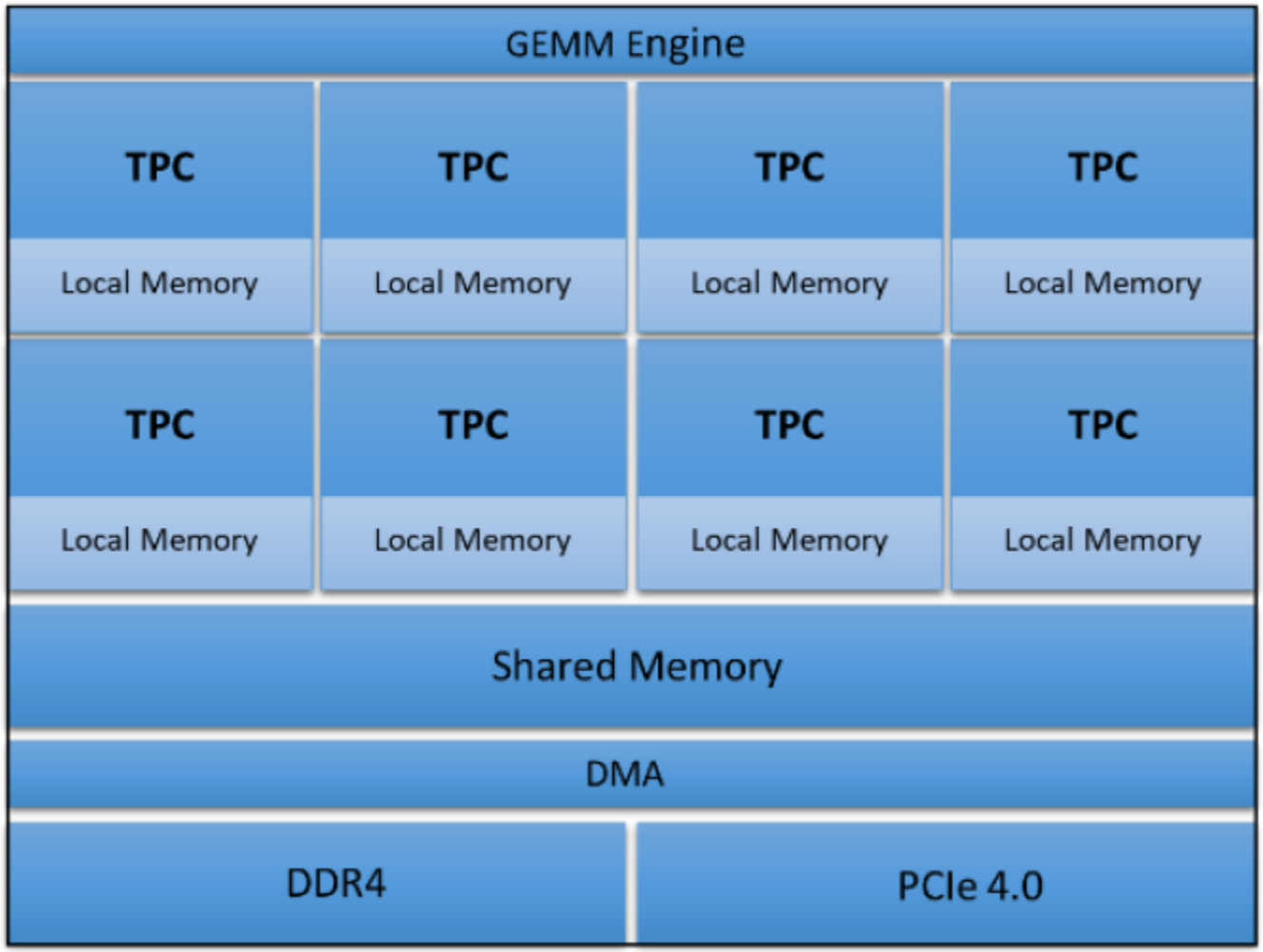

Gaudi architecture: for Training

- Heterogenous compute architecture
  - TPC, GEMM & DMA using a shared SRAM
- VLIW SIMD TPC 2.0 Core (C-programmable)
- GEMM operations engine
- Tensor addressing
- Robust to any address stride
- Latency hiding capabilities
- PCIe Gen4.0 x16
- 4 HBMs: 2GT/s, 32 GB capacity, BW 1 TB/sec
- 10 ports of 100Gb Ethernet, or 20x50 GbE
  - With integrated RDMA over Converged Ethernet (RoCE v2)
- Dedicated HW and TPC ISA for special functions acceleration (e.g. Sigmoid, GeLU, Tanh)
- Mixed-precision data types: FP32, BF16, INT32, INT16, INT8, UINT32, UINT16 and UINT8

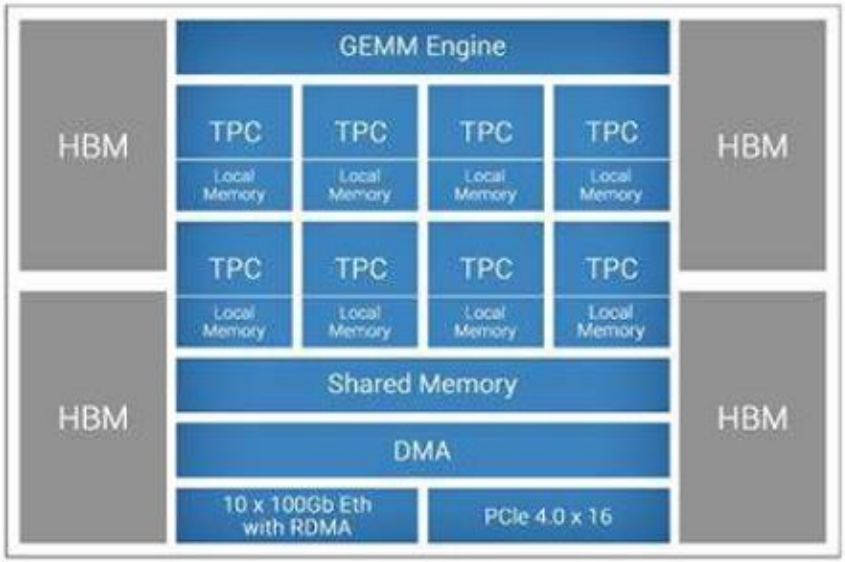

TSMC – 16nm

Gaudi architecture

- Has more powerful TPC and GEMM engines than Goya
- It also supports bfloat16 and includes 32 GB on-package HBM2 memory
- Most significant change is its networking capability. Each Gaudi has ten ports of 100 Gb/sec Ethernet that supports RDMA over Converged Ethernet (RoCE).
- Gaudi is the only processor that
  - incorporates RDMA directly onto the package and
  - offers 1 Tb/sec of connectivity to each processor.
- Faster training requires scaling effectively (non-blocking RDMA) within node and across multiple nodes

Inter-processor communication

- For inter-processor communication, Gaudi relies on standard Ethernet.
  - Avoids need of developing its own proprietary interconnect.
- The chips also integrate RDMA over Converged Ethernet (RoCE) directly on-die along with the ports.
  - This eliminates both PCIe switch and RDMA switch.
- Since this is done on per-port, the aggregated bandwidth for Gaudi is 10X that of Nvidia V100 without NVlink.
- Gaudi supports transfer of parameters, tensor, and sub-tensor over Ethernet

HLS-1 system

- HLS-1 is a 3U server with 8 Gaudi processor chips
- Each chip provides three ports for external communication, so HLS-1 has 24 ports.
- Nvidia's DGX-1 and DGX-2 systems has 4 & 8 ports of 100 Gb/sec, respectively.
- A 128-Gaudi processor cluster can be built with 16 HLS-1 systems using 10 Ethernet switches.
- Either data- or model-parallelism can be used
- Gaudi uses "model parallelism" through the on-die fabric to scale out to hundreds or even thousands of nodes.

HLS-1 Functional Diagram

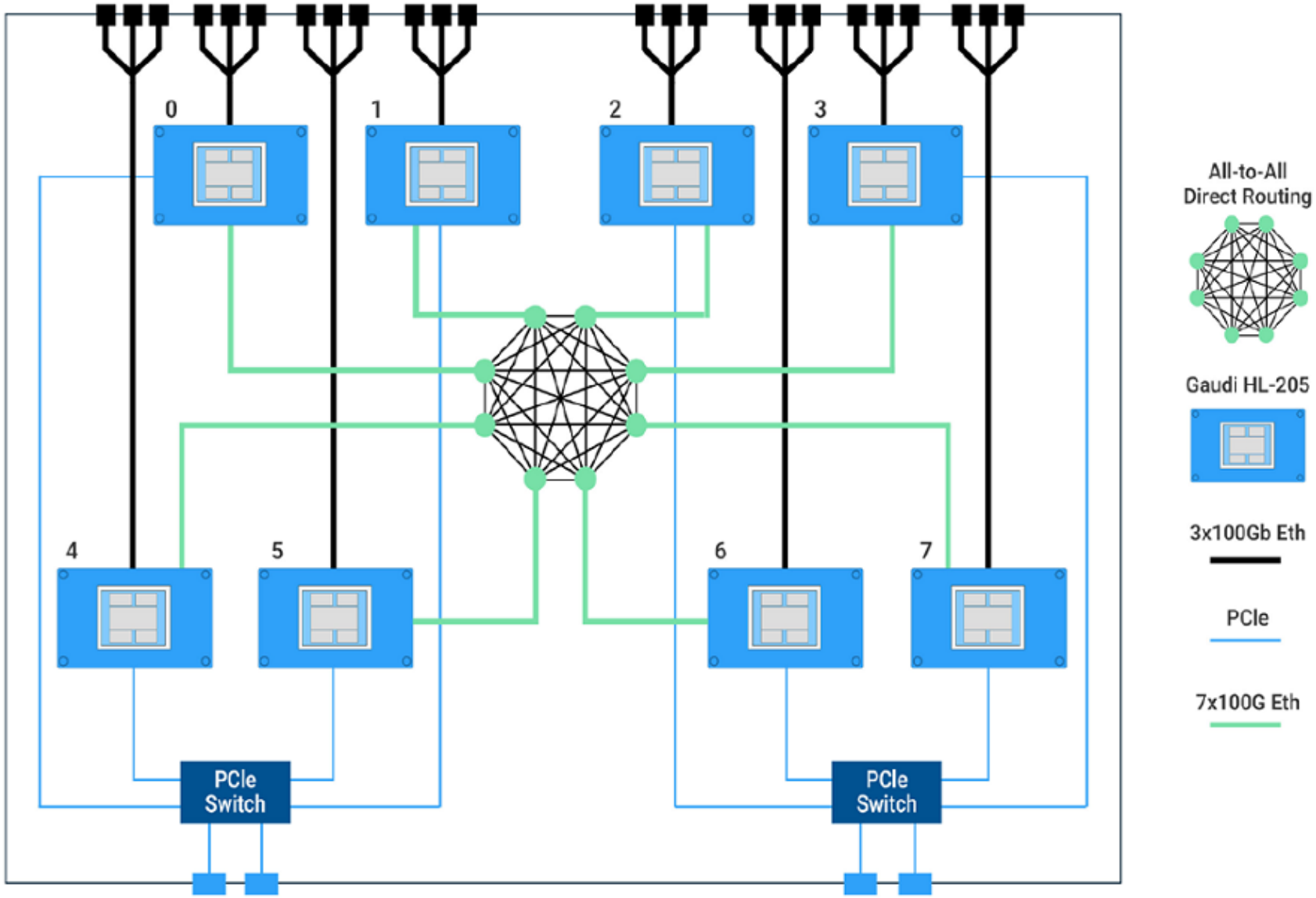

HLS-1 details

- Internally, seven of each chip's 100GbE links are used to connect the HL-2000 processors to one another in non-blocking, all-to-all fashion,
- Remaining three links are contributed to the server to build out larger clusters – so 24 100GbE external ports.
  - By contrast, GPU-accelerated server is usually limited by single network interface.
- None of the Ethernet bandwidth is used for connecting to host servers or flash storage.
- For that, Habana has provided four PCIe Gen4 x16 interfaces.

Gaudi's advantage of using RDMA

- Nervana uses model parallelism through a fast, low-latency fabric directly on its NNP-T die, but unlike Habana,
  - Its fabric is not based on industry-standard Ethernet.
  - Its fabric does not support ROCE
- By putting ROCE on the chip, Gaudi offers 8 very fast (100Gb) interconnect ports without
  - Network Interface Card (NIC) (>$1000)
  - Top of rack switch (~$10K)
- RDMA greatly simplifies programmer's challenge of accessing shared memory across a large fabric, …
- …and improves performance compared to using software to share memory that consumes CPU cycles.

Advantages of HLS-1

- HLS-1 platform does not include a CPU; it provides PCIe switches for a host interface, and the user determines the right CPU to Gaudi ratio.
- Thus, the HLS-1 platform decouples
  - management traffic to PCIe and
  - scale-out traffic to Ethernet,
- which mitigates PCIe and scale-out bottlenecks.

Habana vs Nervana Neural processor

- Habana has a converged architecture for inference and training
- NNP-T and NNP-I chips did not have that feature: each chip was separately designed and compatibility was not a design factor.
- This complicates the task of building and optimizing software that can run on either chip.
- NNP-T chip was developed by TSMC, NNP-I chip by Intel
  - ➔ each is built with different libraries.

Results

- Gaudi is present in Amazon EC2 instances for machine learning workloads
- Gaudi accelerators promise 40% better price-performance than the best performing GPU instances
- For training ResNet-50, Gaudi has throughput of 1,650 images/sec with a batch size of 64.
- V100 has throughput of 1360 image/sec

Throughput at scale

- For most training set-ups, on going beyond 8 or 16 accelerators, i.e., going outside server chassis, performance flattens out.
- However, Gaudi shows near-linear performance gains
- At 650 processors, Gaudi HL-2000 has 3.8X higher throughput than V100.

Throughput at scale

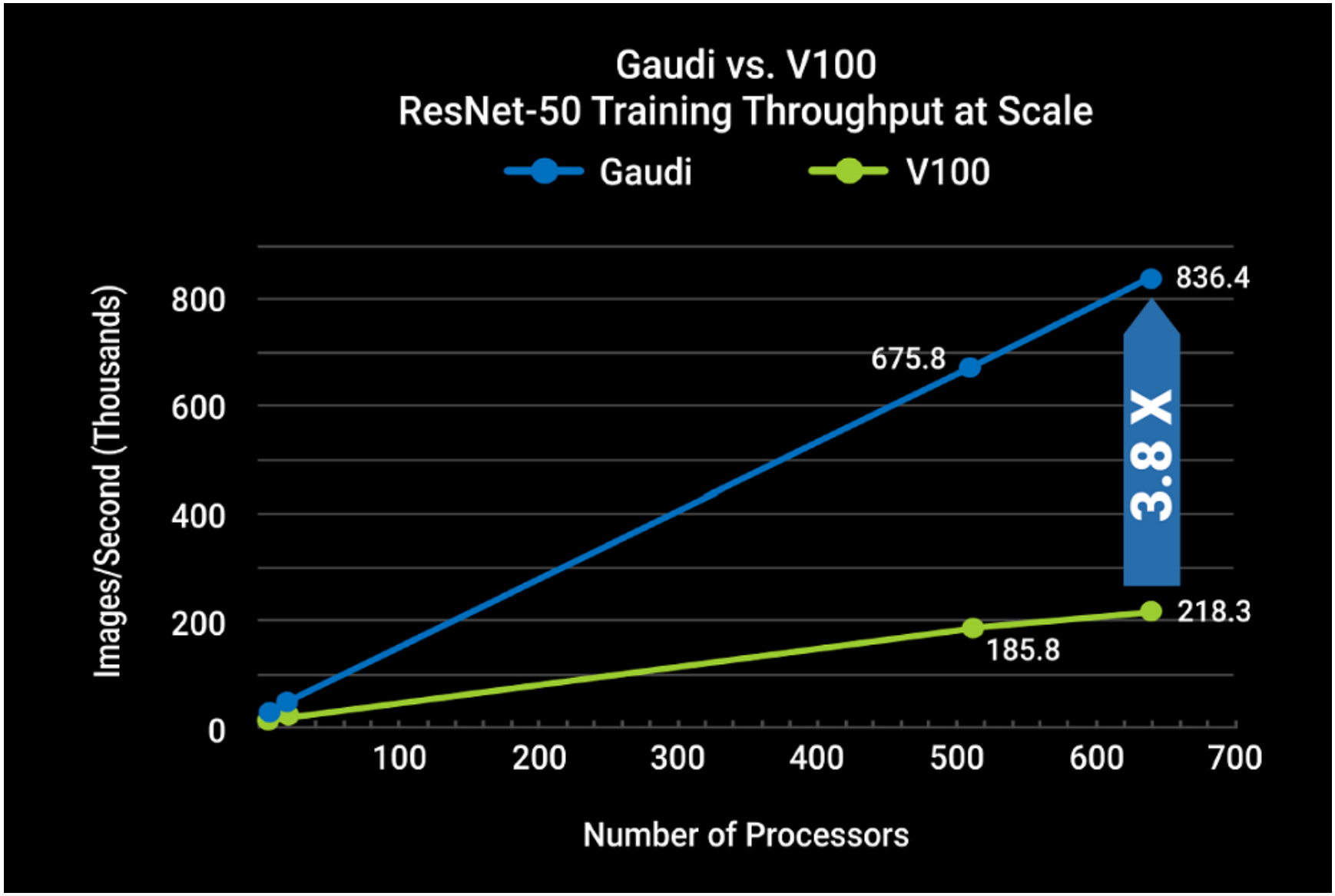

Advantage of Ethernet

- Compared to exotic links like NVLink or OpenCAPI, Ethernet enables Gaudi to
  - be used in existing datacenters, and
  - build AI clusters using standard Ethernet switches available from many network providers.
- This explains why NVIDIA has acquired Mellanox's Ethernet technology!