Untether's TsunAImi : An Inference Processor

Sparsh Mittal

Acronyms/symbols

- Coefficients are same as weights
- DMA = direct memory access
- GEMV = matrix-vector multiplication
- Multiple GEMVs can be combined to realize GEMM (matrix-matrix multiplication)

- TsunAImi has 4 runAI200 chips
- We will discuss architecture of runAI200 chips

Contents

- Motivation: minimizing data-movement energy
- runAI200 architecture: overall specifications
- Interconnect architecture
- PE architecture
- Results

Innovation: minimizing data-movement

- Data-movement takes huge fraction of power (e.g., >90%)
- To avoid this, they propose an architecture "at-memory computation"
- runAI200 chip puts large amounts of memory as close as possible to the location where data will be needed for computation.

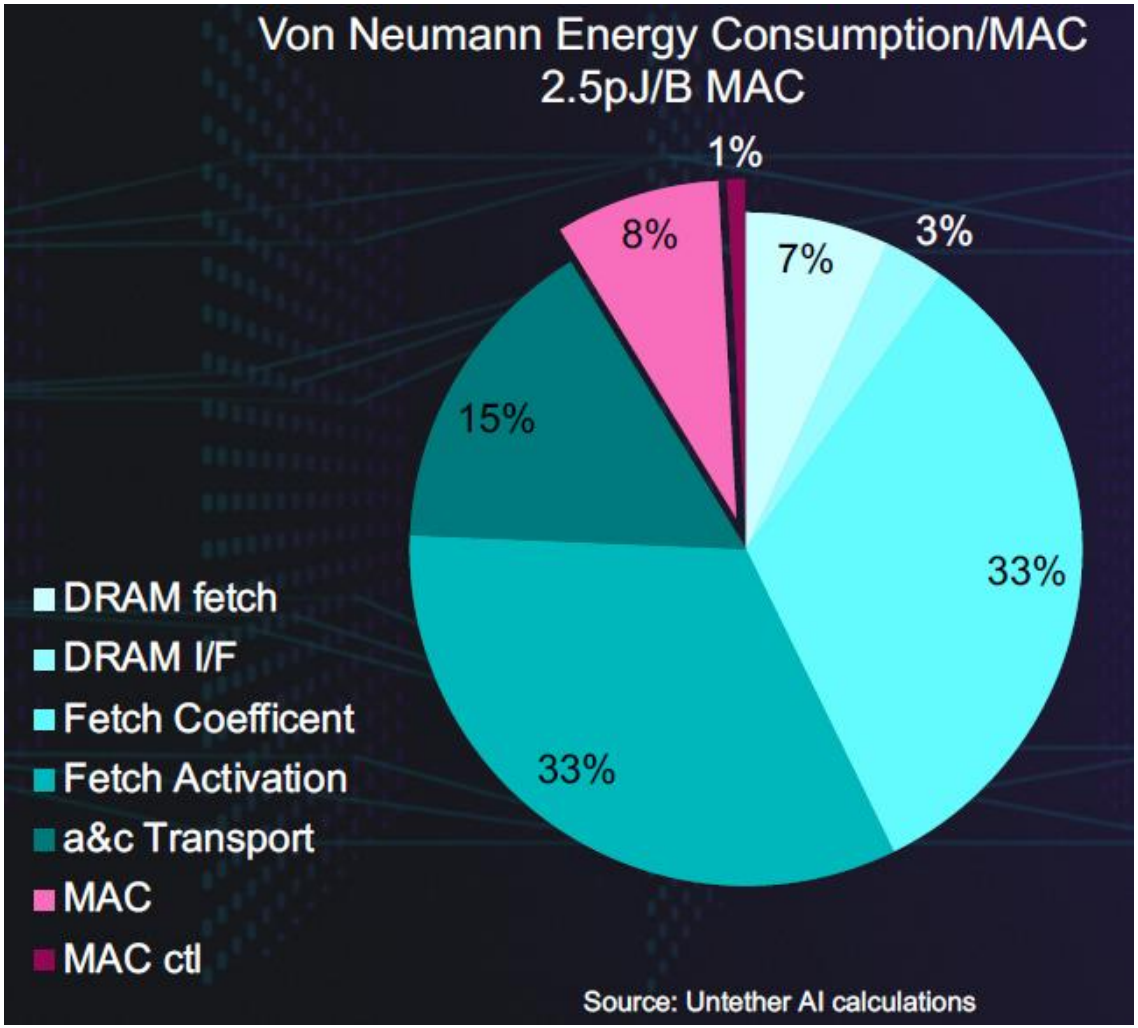

At-memory computation

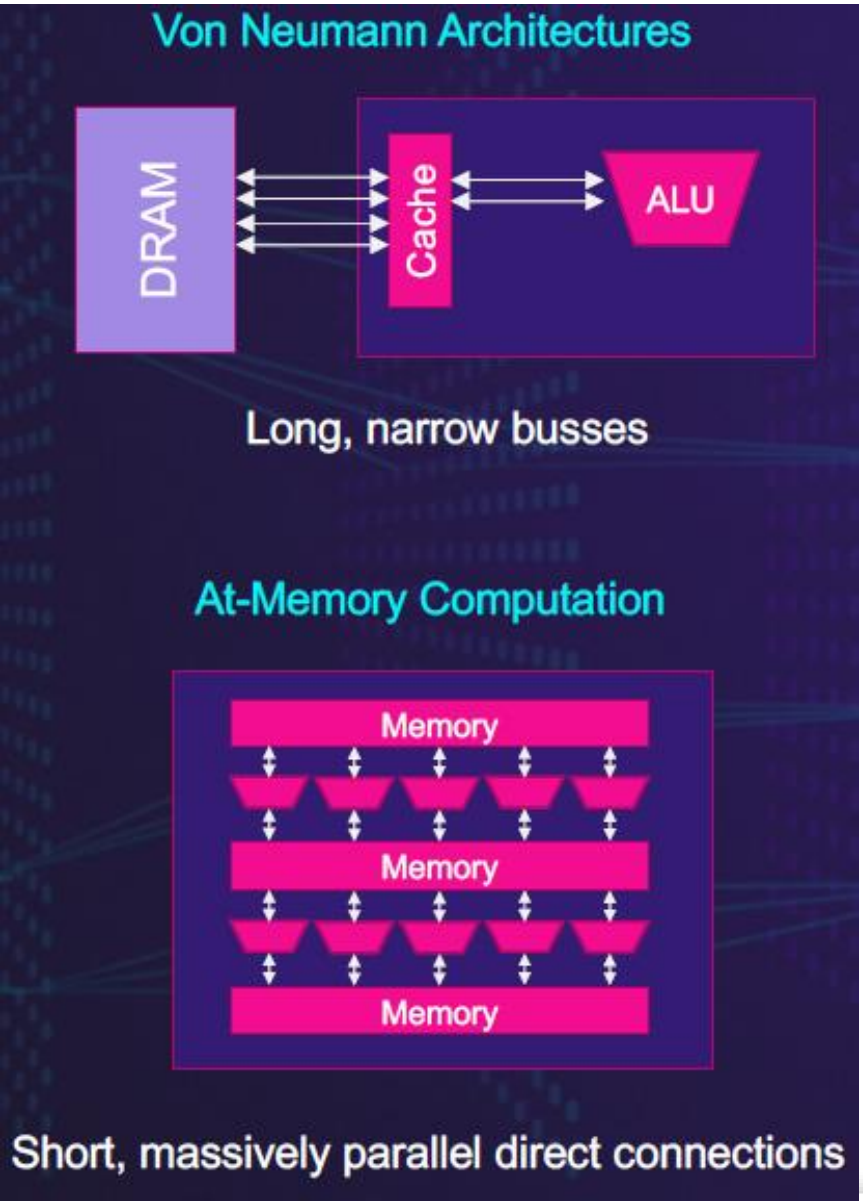

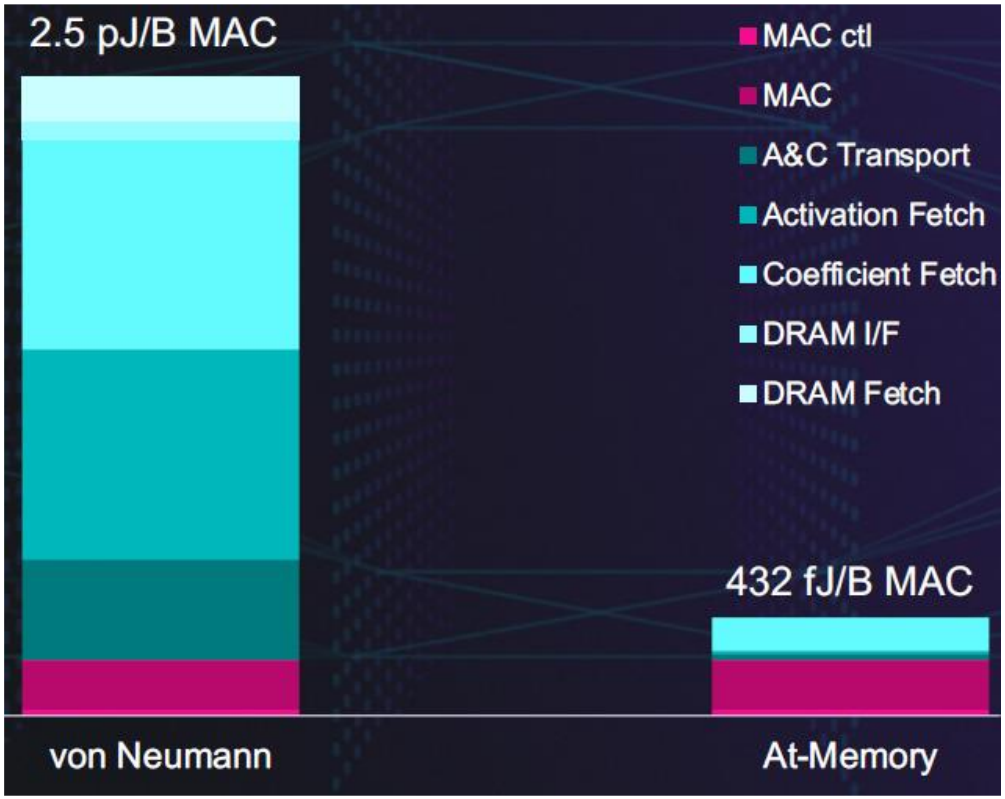

6X power reduction per MAC
No DRAM access, short travel

runAI200 Device – Industry's First At-Memory Computation Engine

200MB on-chip SRAM
- Organized in 511 memory banks

18.4B Transistors on cost efficient 16nm
- Redundancy for excellent yields

502 TOPs
- >260K processing elements embedded in memory array
  - 512 2D SIMD per bank
- Optimized for 8-bit inference

Scalable voltage/frequency
- 720MHz "Eco" mode, 960MHz "Sport" mode
- 8 TOPs/W

AI-tailored interconnect

runAI200 Architecture

511 Memory Banks
385K SRAM
512 Processing Elements
RISC Controller

Rotator Cuff
Row-based bank-to-bank local interconnect
16GB/s bank-to-bank
8TB/s total

Direct Row Transfer
Column-based bank-to-bank local interconnect
32GB/s bank-to-bank
15TB/s total

X16 PCIe Gen4
Host connectivity
32GB/s

Pipelined Bus
Banks to PCIe connectivity
Row-based ring
8GB/s per row
80GB/s Total

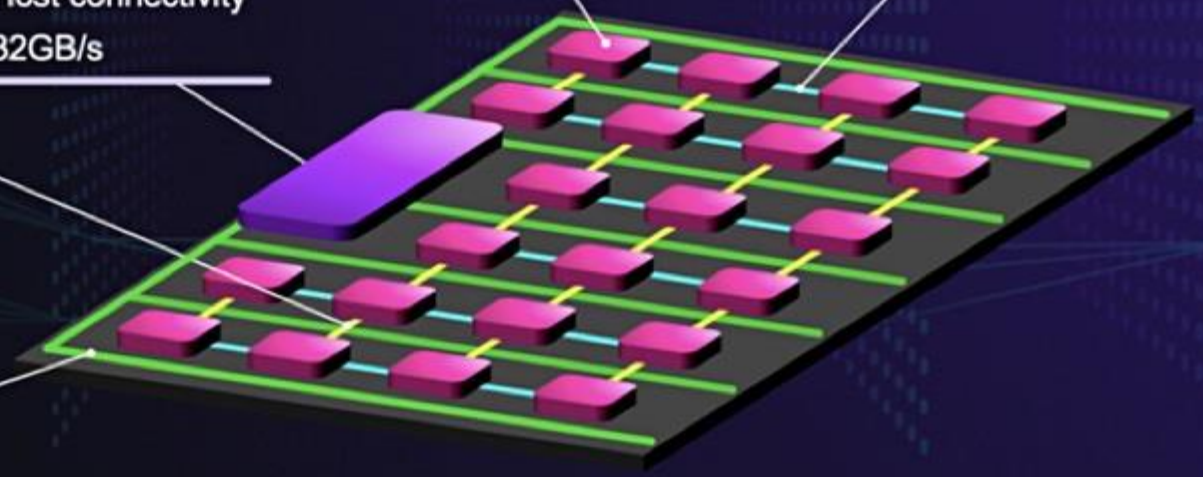

Lets do the math

- 511 banks, each bank has 512 PEs, 385KB SRAM and 512GB/s bandwidth
- ➔ Total PEs are 511*512 = 261632
- ➔ Total SRAM memory is 511*385/1024 = 192MB
- ➔ Total on-chip bandwidth is 262 TB/s

- PE frequency is 960MHz. Each PE does a MAC operation (which is counted as 2 operations)
- Peak performance = 960MHz*261632*2 = 502 TOPS

Data-transfer can be done in 3 ways

- Pipeline bus
- Rotator cuff
- Direct row transfer

- x16 PCI-Express Gen4 interface supports up to 32GBytes/s of bandwidth
- No external DRAM
- TsunAImi uses purely CMOS process technology

1. Pipeline bus

- Pipeline bus goes on a per row basis from PCI complex to different memory banks
- Those banks can DMA from server DRAM to bring data into top of the network and stream it out at the end.
- This allows flexibility in placing graphs on-chip

runAI200 Architecture

511 Memory Banks
385K SRAM
512 Processing Elements
RISC Controller

Rotator Cuff
Row-based bank-to-bank local interconnect
16GB/s bank-to-bank
8TB/s total

Direct Row Transfer
Column-based bank-to-bank local interconnect
32GB/s bank-to-bank
15TB/s total

X16 PCIe Gen4
Host connectivity
32GB/s

Pipelined Bus
Banks to PCIe connectivity
Row-based ring
8GB/s per row
80GB/s Total

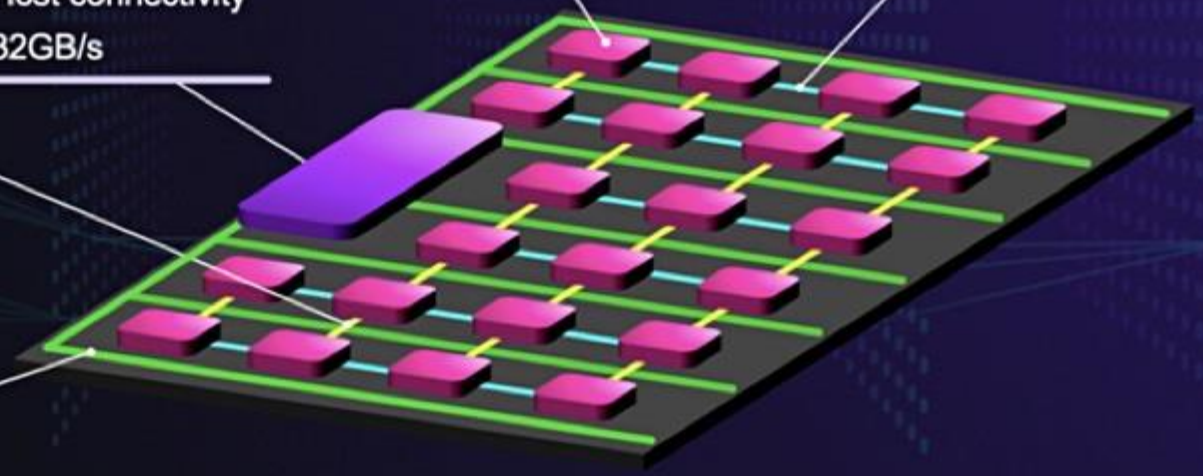

2. Rotator cuff and 3. Direct row-transfer

- Proprietary interconnect:
  - East-West communication (along rows) is via an 8 terabyte/s "rotator cuff,"
  - North-South communication (down columns) is via "direct row transfer" at 15 TB/s.
- Activations are fed by the rotator cuff, which allows for direct contact of three of the nearest neighbors to either side of the PE.
- It moves activations sequentially from one PE to another as they go through the operations, shortening the distance those activations have to go.

TPUv1 architecture (for comparison)

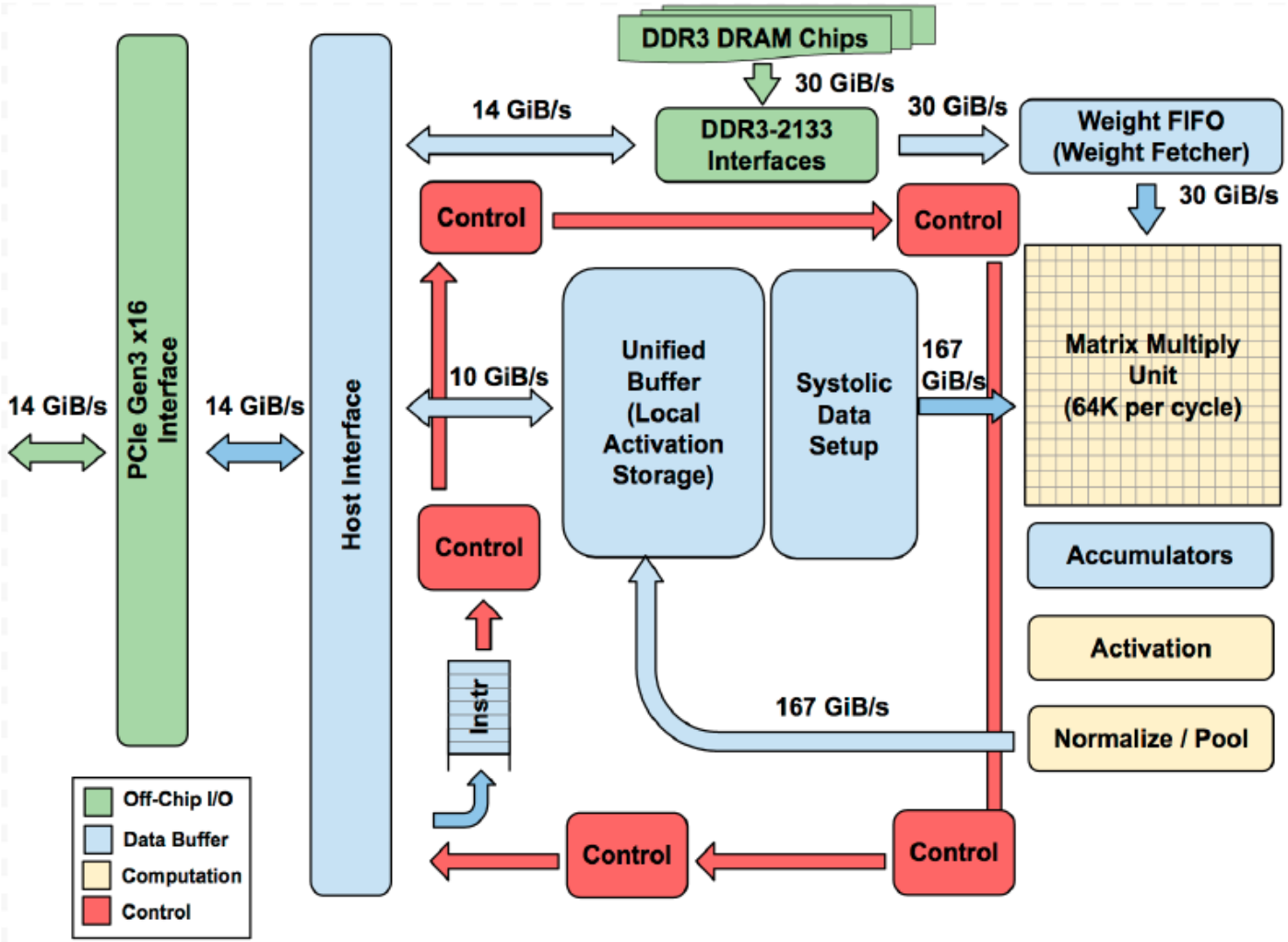

- Direct row transfer can move complete rows of SRAM data between rows within the bank and between the banks.
- In CNNs, activations are multiplied with weights. In runAI chip,
  - compute registers that store weights are driven directly by the SRAM,
  - rotator cuff is used to move the activation data,

Die layout

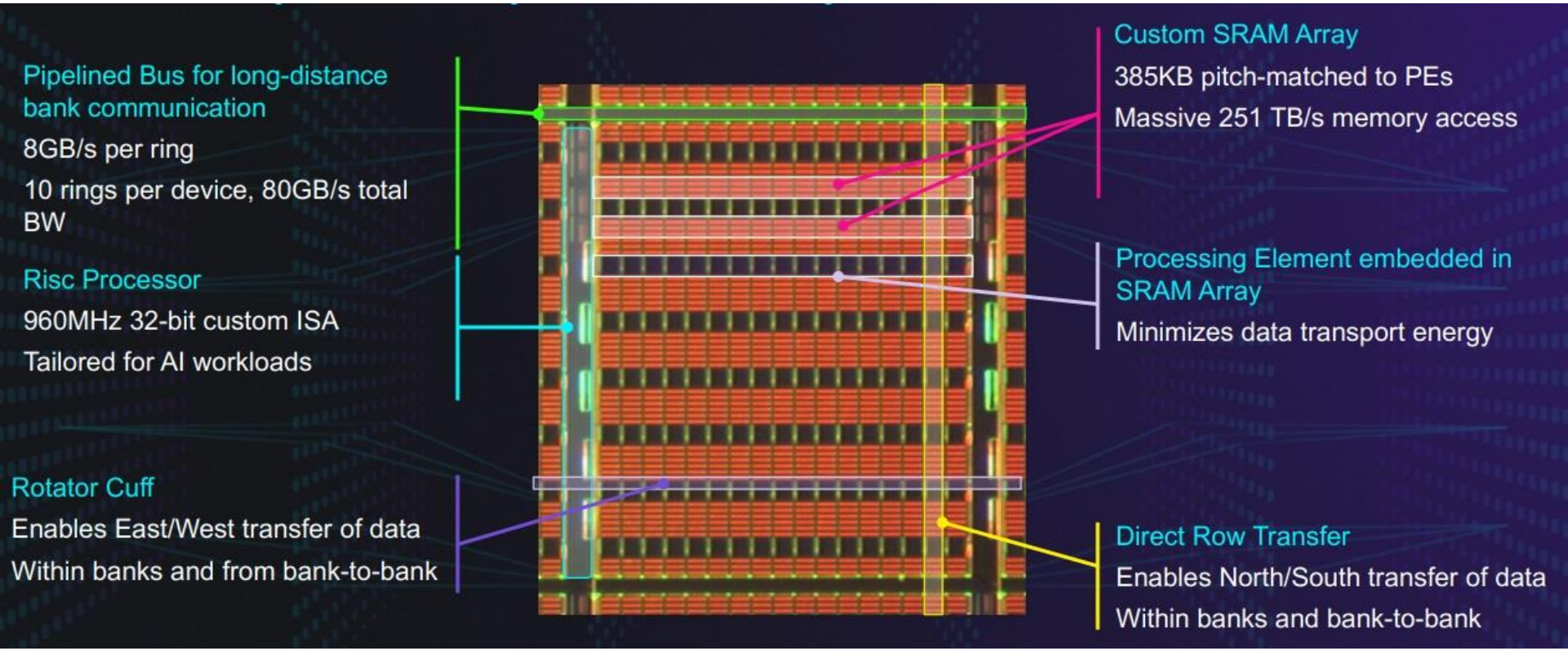

Data moves in a single clock cycle, both in terms of rows and the banks themselves

Memory and compute unit have the same physical width, minimising wasted die area.

Memory Bank Tailored for AI Compute

Rotator Cuff

Enables East/West transfer of data

Each PE can access any 6 nearest neighbors

Within banks and from bank-to-bank

Snake modes at end of rows

Direct Row Transfer

Enables North/South transfer of data

Within banks and from bank-to-bank

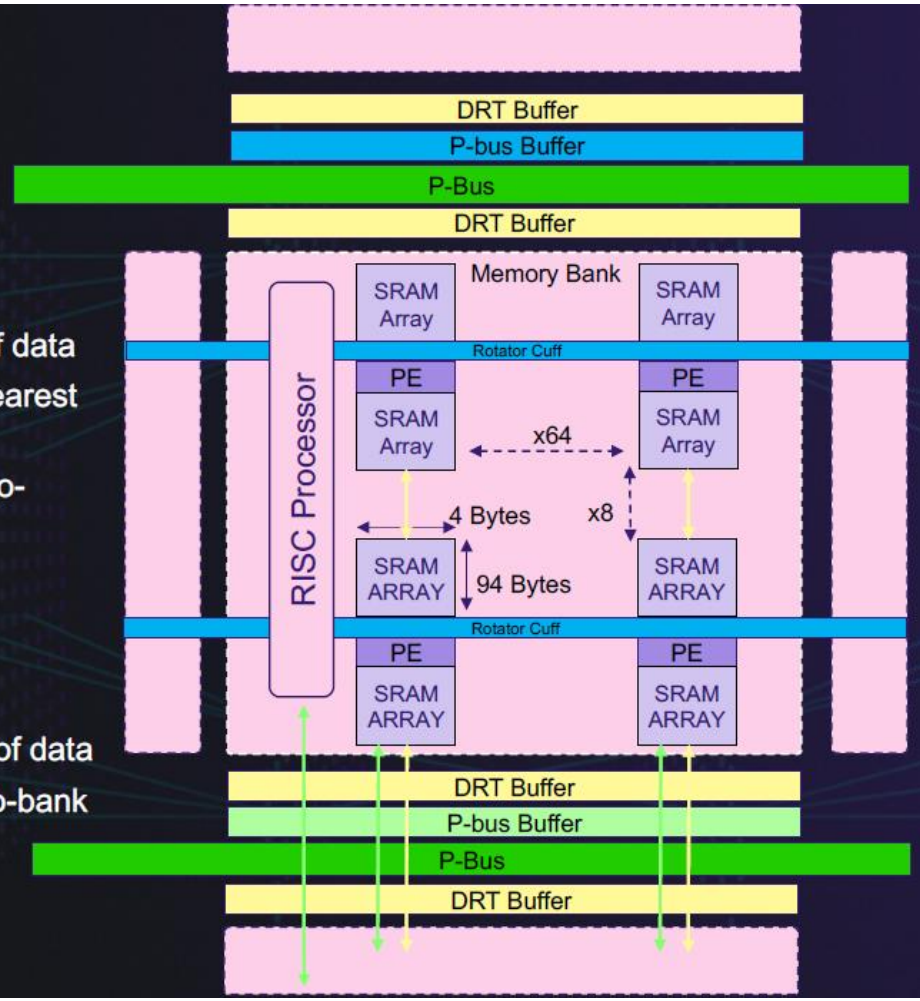

SRAM Array

385KB pitch-matched to PEs

Reduces distance for activation and weight fetch by PE

Processing Element

2D SIMD architecture

512 elements arranged in 64 x 8 array

Managed by custom RISC processor

SRAM is bifurcated to ensure the shortest distance to the processing, as shown by SRAM array above and below the PEs.

Lets do the math

- Each PE connects to 752 bytes (=2*4*94B) of SRAM
- There are 512 PEs in each bank
- So, total memory = 752*512B, which is ~385KB

RISC processor

- Each bank is controlled by a 32-bit custom instruction set RISC CPU
- It handles housekeeping tasks while the inference fabric (PEs) do the heavy lifting.

RISC Processor

CPU

32-bit custom ISA

Manages register/memory transfers

Configures 2D SIMD and memory array

Message Registers

Enables nearest neighbor communications

General Register File and ALU

16 32-bit registers

Program counter and pre-fetch

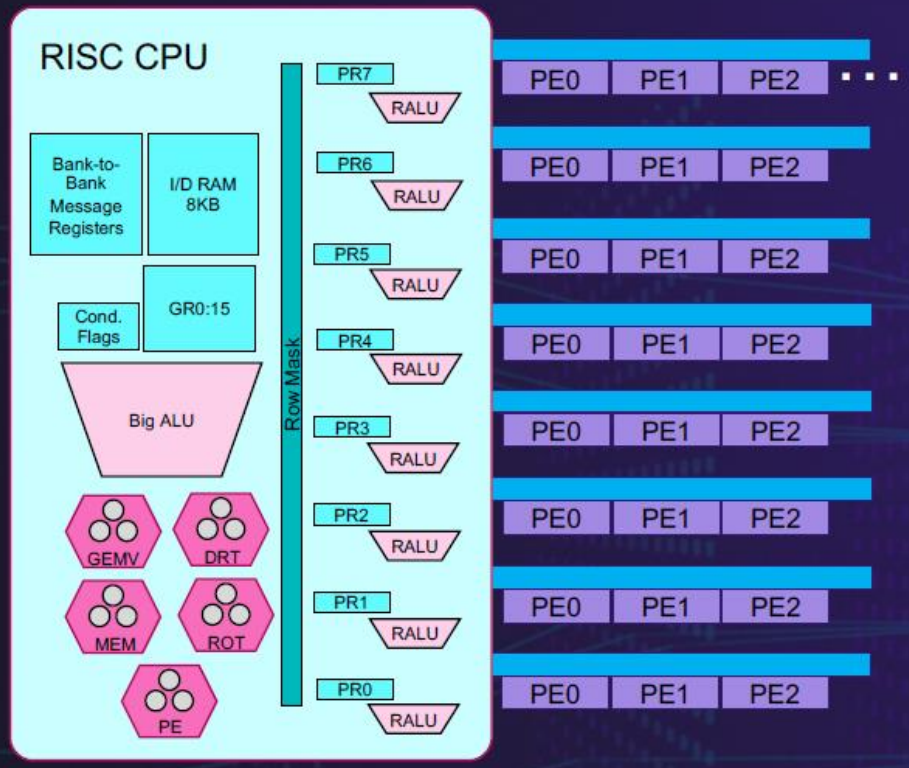

Special-purpose State Machines

Offloads RISC processor

Run concurrently with processor

GEMV, DRT, Memory management, rotation, and PE

Row Mask

Disables individual rows

In combination with PE mask provides fine-grained control of SIMD operations

Row ALUs

32-bit ALUs for aggregate operations (e.g. SoftMax)

Dedicated Per row 32-bit registers

Access to PE0:2 activation registers

PE architecture

- PEs are not general purpose CPUs, but are customized for AI.
- Each PE has its own SRAM to cut down on data movement
- Each PE connects to 752 bytes of SRAM
- PEs can execute multiply-accumulate operations and also multiplication, addition and subtraction.

Massive memory bandwidth

512 GB/s/Bank memory access

262 TBs total on-chip memory access bandwidth

Zero Detect for sparsity

Cuts power by ½ (216 fJ vs 432 fJ)

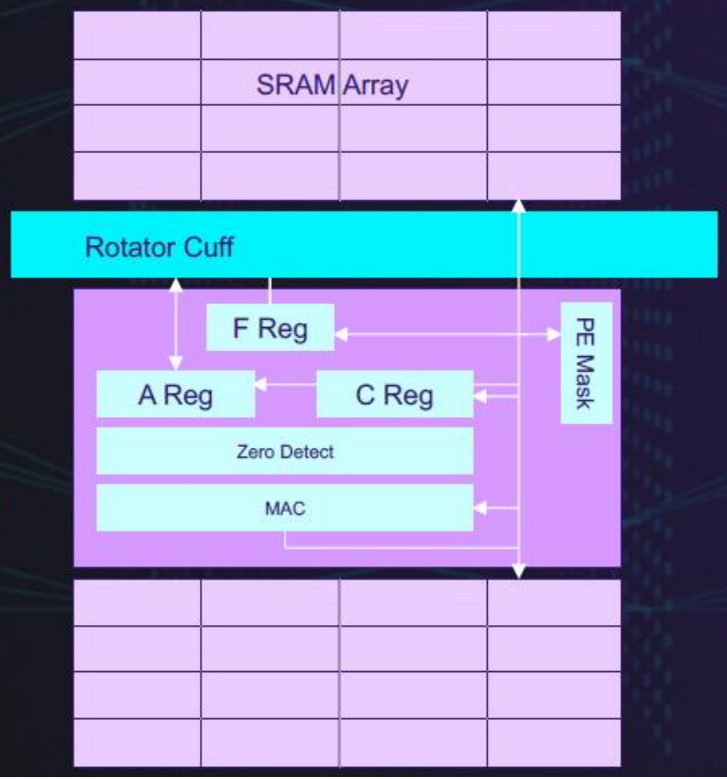

Rapid GEMV

Activation Register (A Reg) receives bytes from Rotator Cuff

F Reg holds address of Rotator Cuff selection

PE Mask disables PE

Low-Power Coefficient Fetch

SRAM Array directly drives Coefficient Register (C Reg)

Exploiting sparsity

- PEs have zero detect wiring
- If one of the registers shows a zero value, multiply/accumulator doesn't handle it
- This reduces power by half: Fetch is done but compute is avoided.
- This is in addition to any sparsity/pruning schemes that can be run at the tool flow level.

Effect of quantization on accuracy

	FP32	INT8
ResNet-50 v1.5	76.458%	76.298%
MobileNet v1	71.666%	70.620%

- Quantization costs only small accuracy loss, but boosts performance significantly
- Software tools allow push-button quantization, , physical allocation, and multi-chip partitioning.
- It supports TensorFlow and PyTorch

Summary/comments

- Architecture has some similarities to FPGA
  - localized on-chip memory blocks and redundancy
- Optimizations used: INT8, batch-size 1, data-locality, massively-parallel MAC operations, voltage-frequency scaling, avoiding operations on zeros
- Accelerators that can avoid computations on zeros
  - TsunAImi, Cerebras WSE, Alibaba Hanguang
- Working in 16nm helps keep cost down and yield high
- Limitations: no DRAM, only INT8 support (no BF16 or FP16)

SRAM capacity in accelerators having no DRAM

	SRAM capacity
IPU1	300MB
IPU2 (has DRAM)	900MB
WSE1	18GB
WSE2	40GB
HanGuang	192MB
TsunAImi	800MB

Which accelerator is optimized for Batch-size of 1

Batch-size of 1	Higher Batch size
Microsoft's Brainwave	GPU
Intel Habana's Goya	TPU
Untether's TsunAImi	Cerebras WSE
Alibaba's HanGuang	Graphcore's IPU
Groq's TSP	

Results

tsunAImi Accelerator Card: 2 PetaOps in PCIe Form Factor

800MB on-chip SRAM

1 PetaByte/s memory bandwidth

x16 PCIe Gen4

- PCIe switch x16 to 4 ports of x4

Scalable voltage/frequency

- Eco and Sport modes

Runtime API control

- Health monitoring

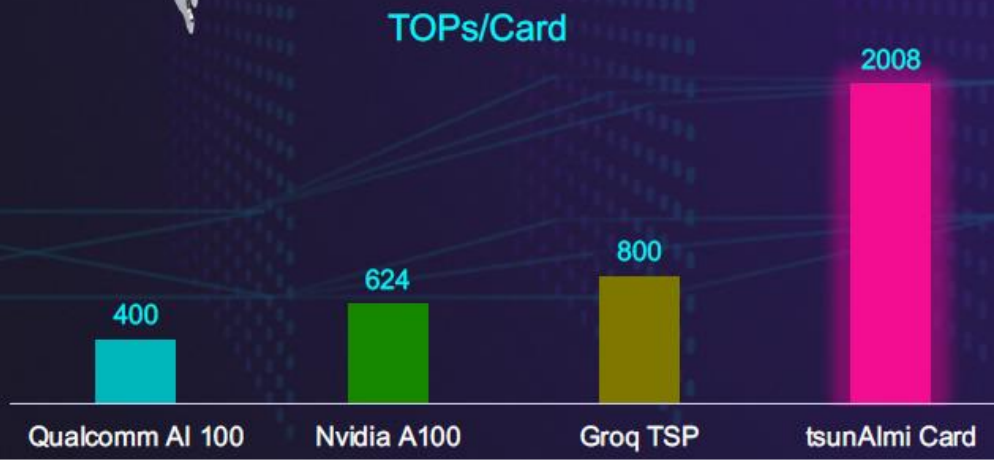

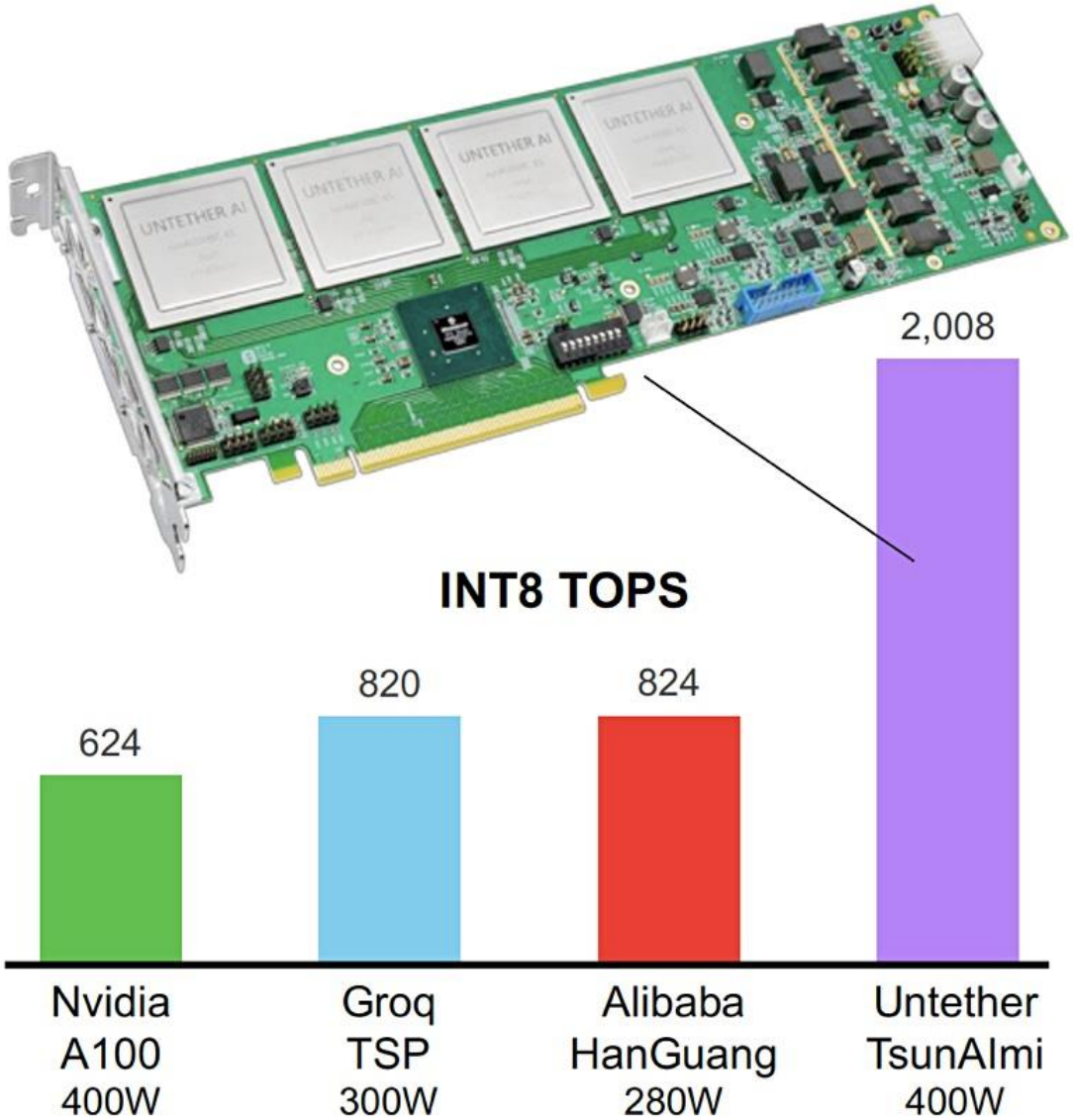
UNTETHER AI
INT8 TOPS
624
820
824
2,008
Nvidia
A100
400W
Groq
TSP
300W
Alibaba
HanGuang
280W
Untether
TsunAImi
400W

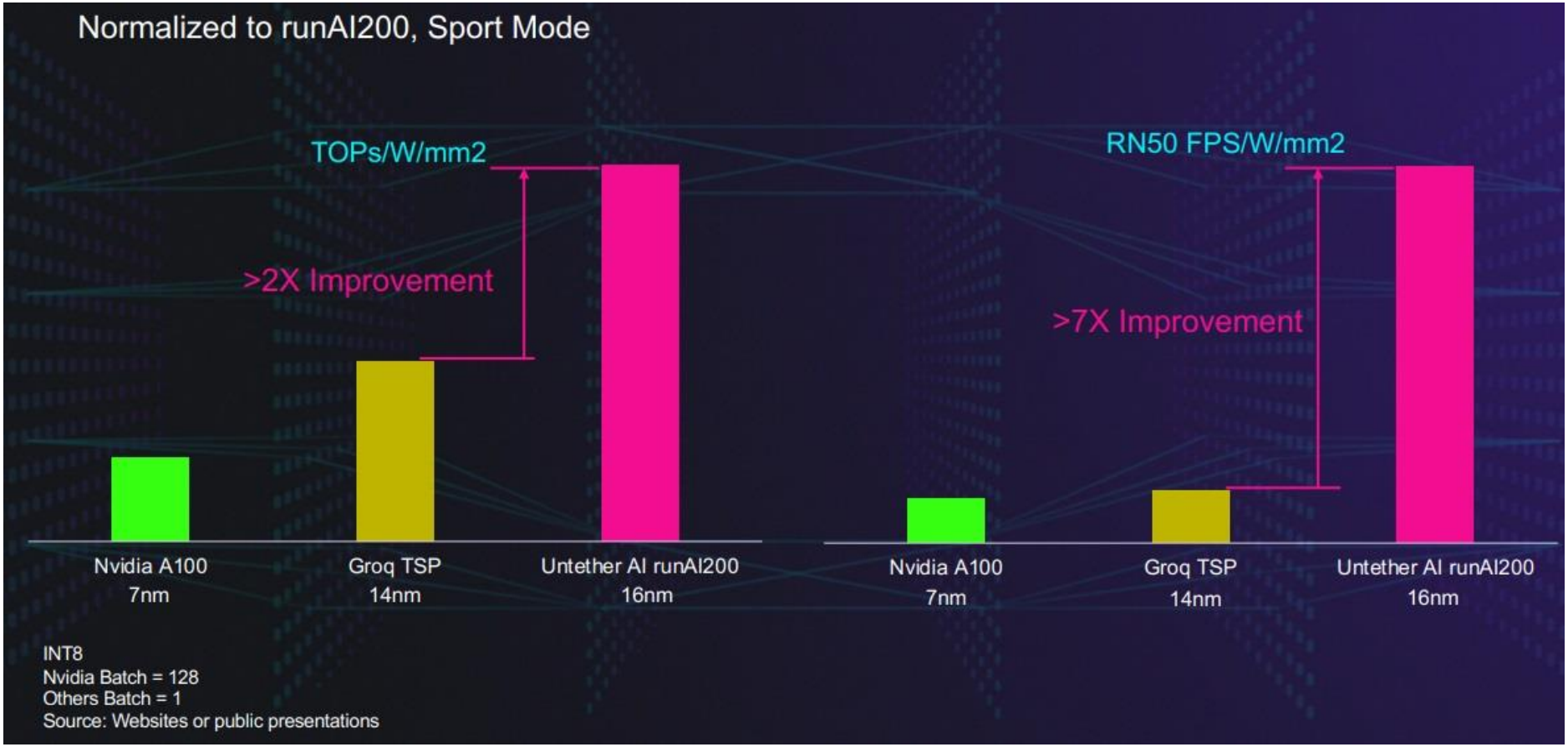
Normalized to runAI200, Sport Mode
TOPs/W/mm2
>2X Improvement
Nvidia A100
7nm
Groq TSP
14nm
Untether AI runAI200
16nm
RN50 FPS/W/mm2
>7X Improvement
Nvidia A100
7nm
Groq TSP
14nm
Untether AI runAI200
16nm
INT8
Nvidia Batch = 128
Others Batch = 1
Source: Websites or public presentations

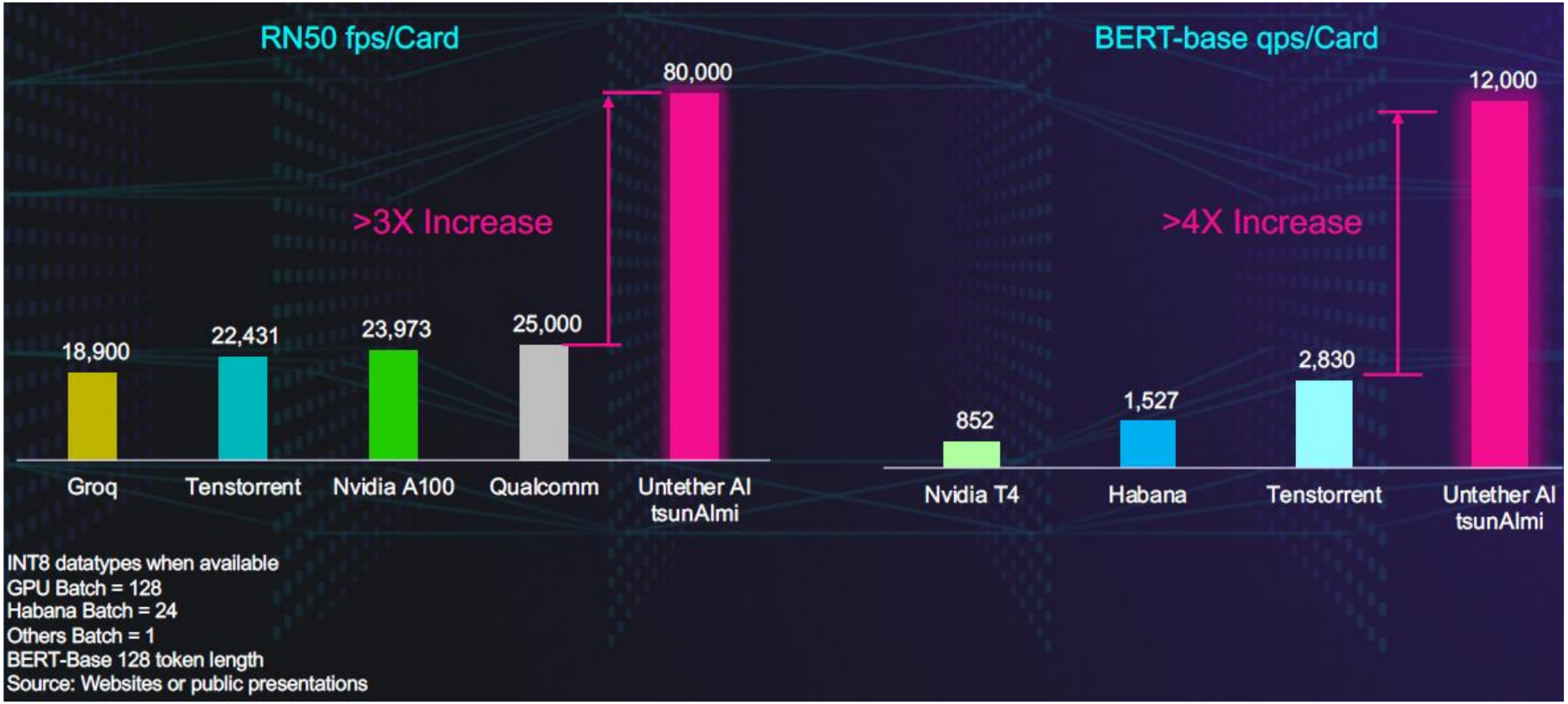
RN50 fps/Card
>3X Increase
18,900
22,431
23,973
25,000
80,000
Groq
Tenstorrent
Nvidia A100
Qualcomm
Untether AI tsunAImi
BERT-base qps/Card
>4X Increase
852
1,527
2,830
12,000
Nvidia T4
Habana
Tenstorrent
Untether AI tsunAImi
INT8 datatypes when available
GPU Batch = 128
Habana Batch = 24
Others Batch = 1
BERT-Base 128 token length
Source: Websites or public presentations

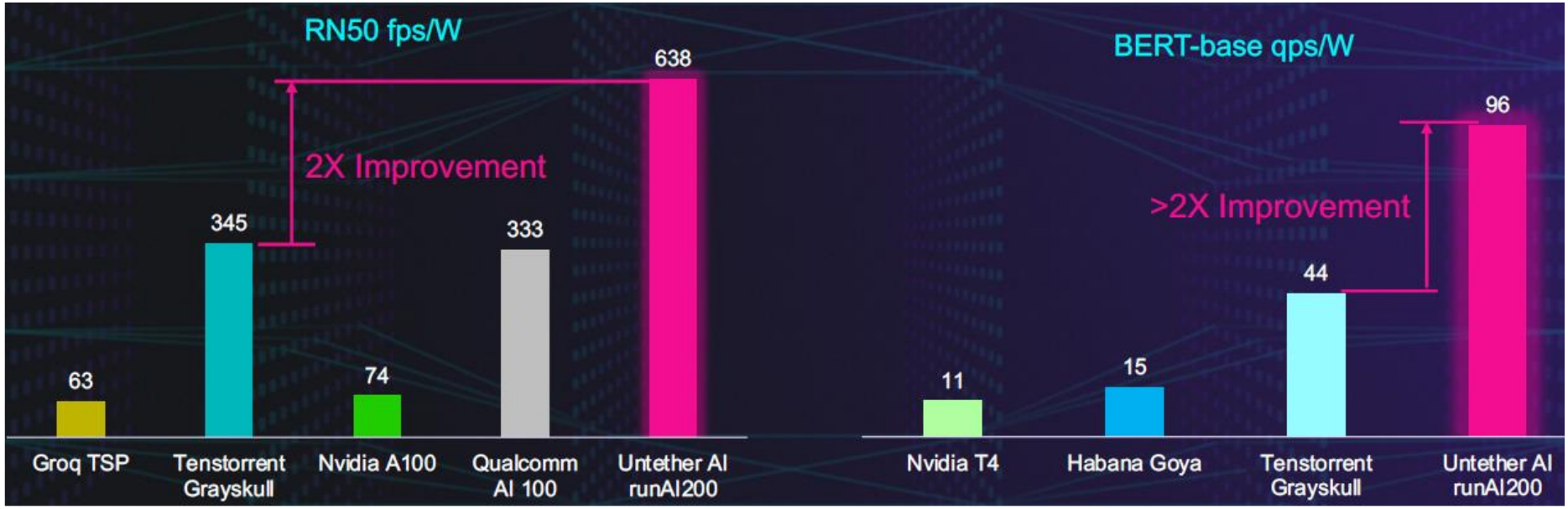
RN50 fps/W
638
2X Improvement
345
333
63
74
Groq TSP
Tenstorrent Grayskull
Nvidia A100
Qualcomm AI 100
Untether AI runAI200
BERT-base qps/W
96
>2X Improvement
44
15
11
Nvidia T4
Habana Goya
Tenstorrent Grayskull
Untether AI runAI200

Results

- TsunAImi card can process 80,000 frames per second for ResNet-50
  - four streams of batch=1 data fed to four chips simultaneously – 20,000 fps per chip.
- For natural language processing, tsunAImi processs >12,000 queries per second (qps) of BERT-base
- At 100W TDP, RunAI200 offers >3x better TOPS per watt than Nvidia's Ampere A100 GPU.
- In eco-mode, it delivers 377 TOPS at 47W.
  - 8 TOPs per watt!

References

- https://blocksandfiles.com/2021/03/25/untether-ai-tsunaimi-pcie-card/
- https://www.nextplatform.com/2020/10/29/server-inference-chip-startup-untethered-from-ai-data-movement/
- Presentation by Robert Beachler – VP of Product