Key Ideas of Reliability Techniques

Sparsh Mittal

Bit-flip in SRAM and DRAM

- A particle strike can flip a value

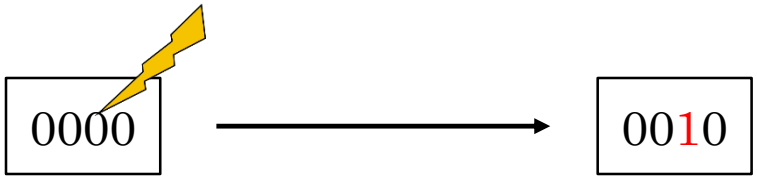

Increasing impact of faults on modern processors

- With ongoing voltage scaling, the critical charge required for flipping a stored bit has been decreasing.
- Even lower-energy particles, which are more numerous, can also cause soft-errors
- The financial and social impact of faults can be huge
- Mission-critical systems require high reliability, e.g., defense, health
- Impact of altitude on soft-errors
  - Compared to sea level, the rate of neutron flux is 3.5X higher at 1.5km and 300X higher at 10-12km (typical altitude where airplanes fly).

Importance of addressing soft-errors

- Errors necessitate use of ECC => latency overhead which grows quickly with increasing correction capability
- Error => an interrupt is raised => servicing it takes >1000X higher latency than cache/ memory access latency => unpredictable slowdowns.

- Errors exceed correction capability => page is retired => memory capacity degraded

Strategies for Improving Soft-error Resilience

- Soft error vulnerability can be reduced by:
  1. Designing memory with radiation-hardened cells
  2. Reducing number of critical bits
     A. Exploiting data compression and narrow data
     B. Turning-off unused portion
  3. Reducing critical time
     A. Early write-back

Reducing number of critical bits

An example of narrow value: 16bit data in 64bit storage

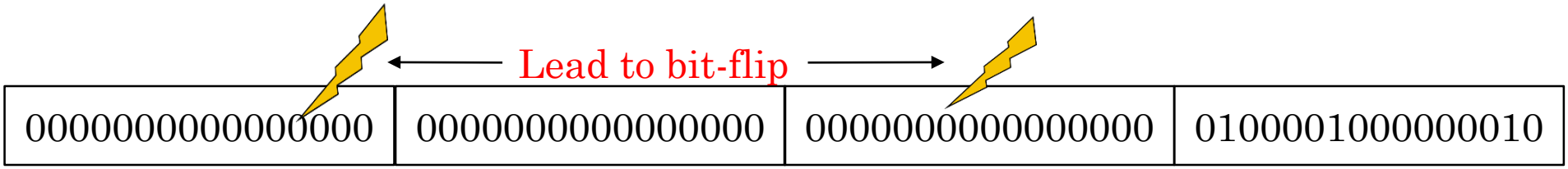

Store only non-zero lower bytes and set isNarrow bit.

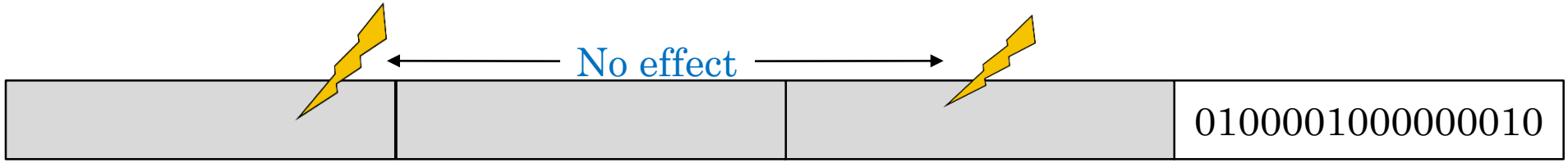

1

isNarrow bit (Soft-error immune)

Original data can be reconstructed using isNarrow bit.

Turning-off unused portion

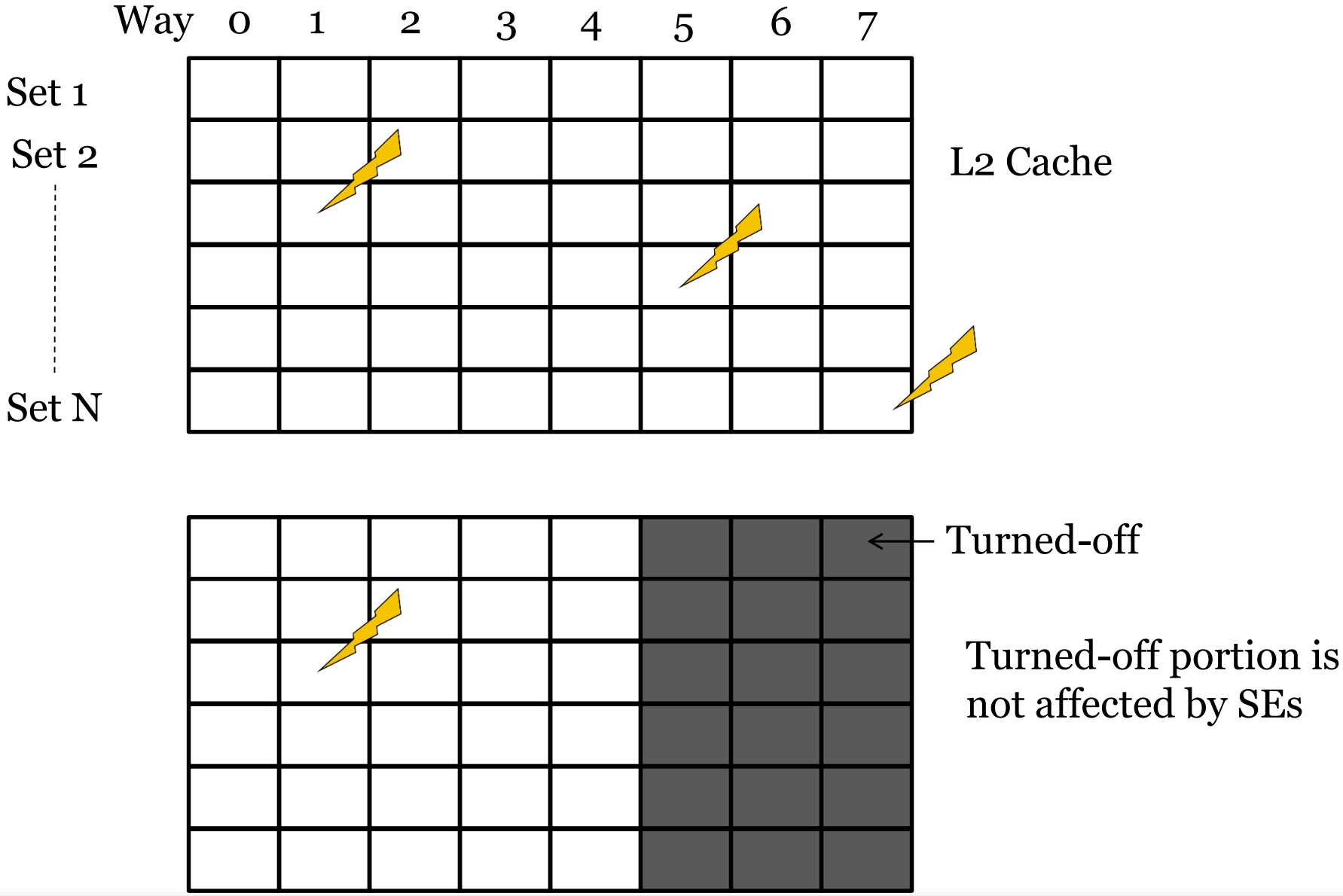

Different vulnerability of MSB and LSB

- MSB is generally more critical than LSB
- Store MSB in SE-resilient memory, LSB in normal memory

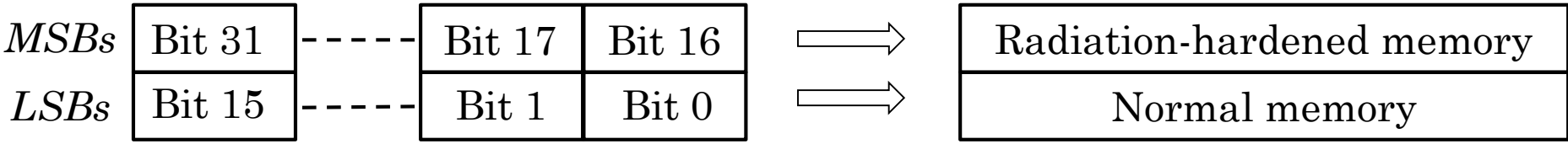

Precision-aware soft-error protection (1 of 2)

- In floating-point intensive GPU apps
  - large magnitude errors can get further amplified to significantly degrade output
  - small magnitude errors have negligible impact

FMA(A,B,C) = A+B*C

- Idea:
  - Verify the entire exponent
  - Verify only MSB of the significand

Precision-aware soft-error protection (2 of 2)

Verify exponent

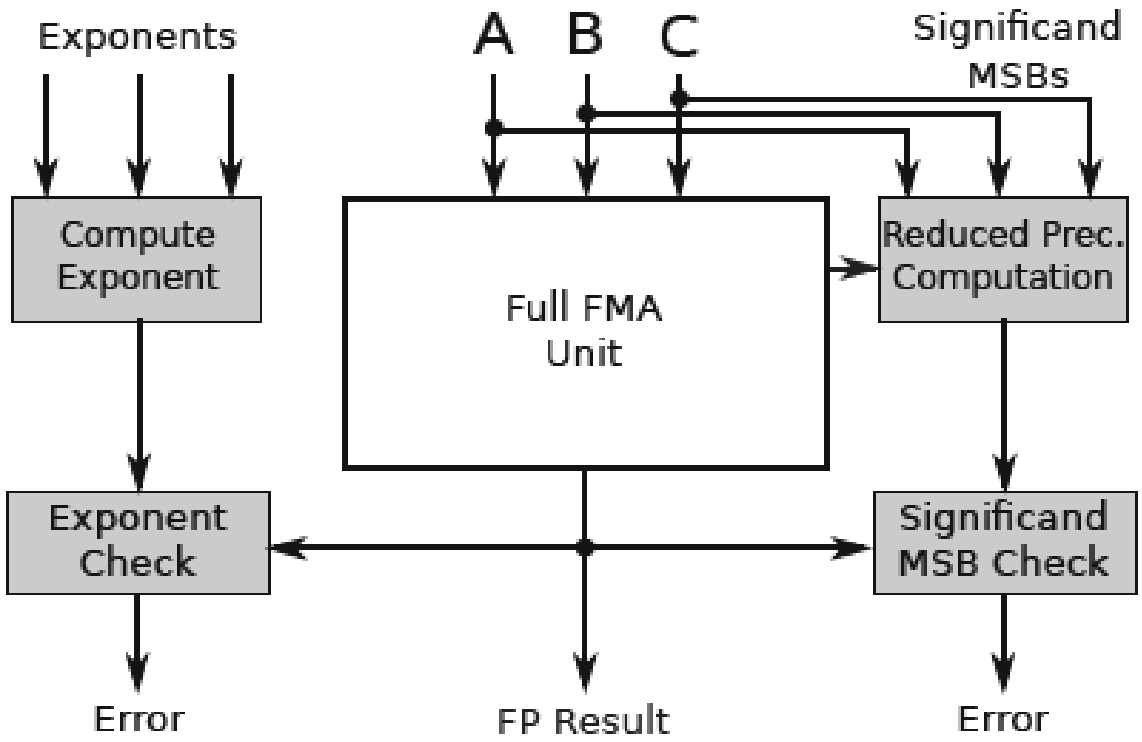

Verify only MSB of significand

Accounting for data criticality

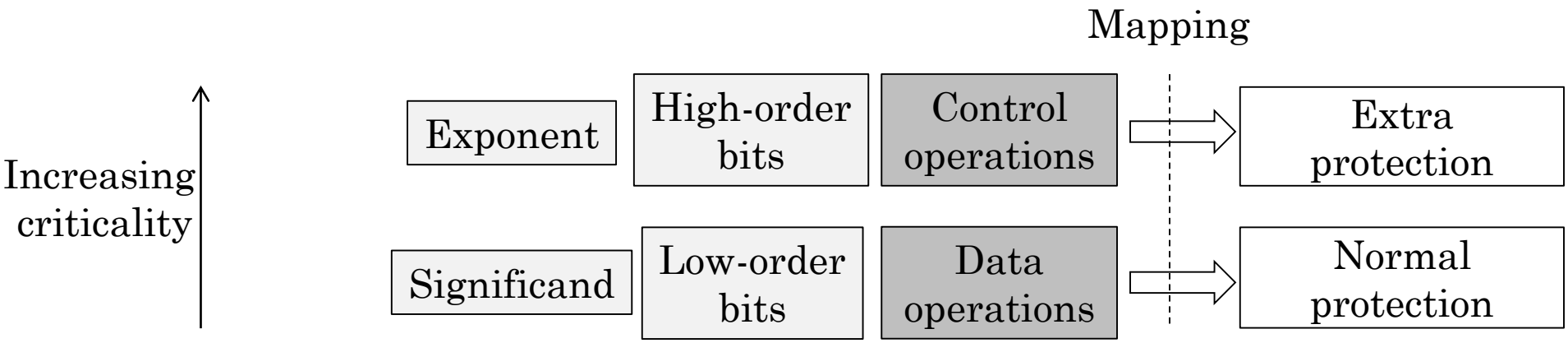

Examples of Extra vs. Normal Protection

- ECC vs parity (or no protection)
- Duplication vs no-duplication
- Soft-error resilient cells vs normal cells
- Verify correctness vs do-not-verify correctness

Additional protection at low-voltage

	Way 0	Way 1	Way 2	Way 3	Way 4	Way 5	Way 6	Way 7
At high voltage	Data way 0	Data way 1	Data way 2	Data way 3	Data way 4	Data way 5	Data way 6	Data way 7
At low voltage	Data way 0	ECC way 0	Data way 1	ECC way 1	Data way 2	ECC way 2	Data way 3	ECC way 3

Perform Redundant Computation: same thread, but at different time

- Computations are repeated at different points in time and then compared to detect soft errors. No extra hardware is required.

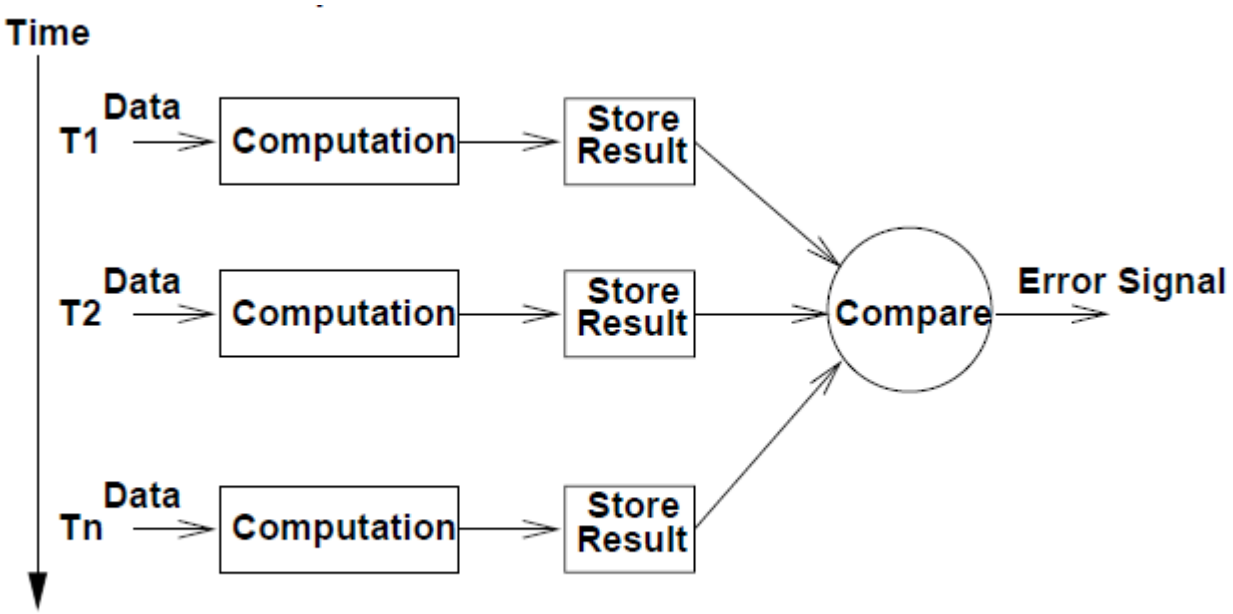

Perform Redundant Computation: extra thread

- With main thread, use another thread(s) for performing redundant computation
- In 3D processor, a checker core can be implemented on a different die than main core

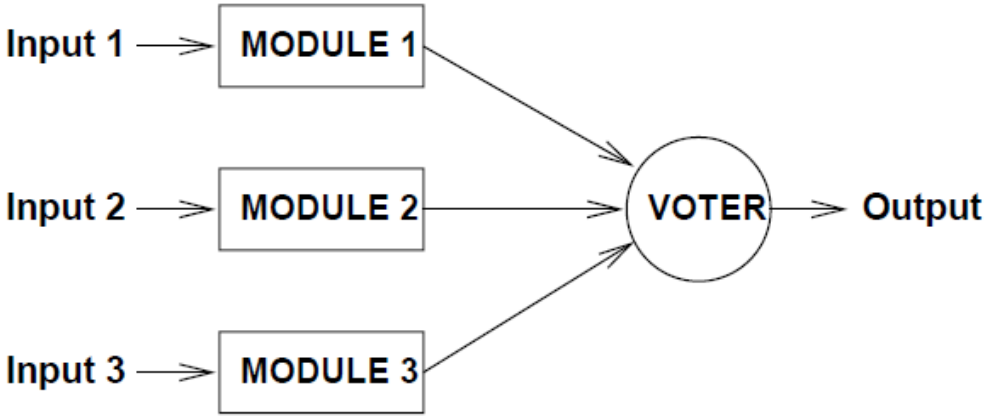

Triple modular redundancy:
Masks failure of a single component.

Effect of 3D on reliability

- 2D chips: charged particles can hit any part of chip in unobstructed manner
- 3D chips: particles need to penetrate multiple layers before reaching inner layers => Different layers have different vulnerability
- In 3D-stacked memory, failed memory cannot be easily replaced, as it will destroy whole package including processor die

Impact of alpha particles on 3D processor

Alpha particles from top get absorbed in bulk silicon => no effect

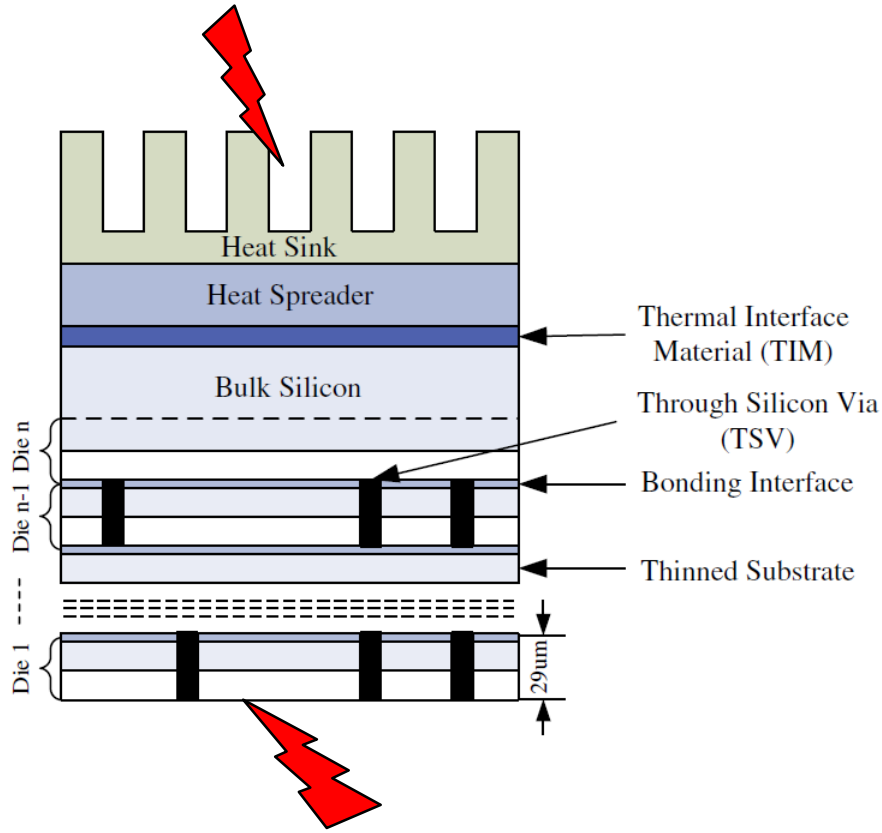

Alpha particles from bottom lead to SEs in die 1 to 3 but Die 4 to n are not affected

Sun et al. MICPRO'11

3D-aware SE protection strategy

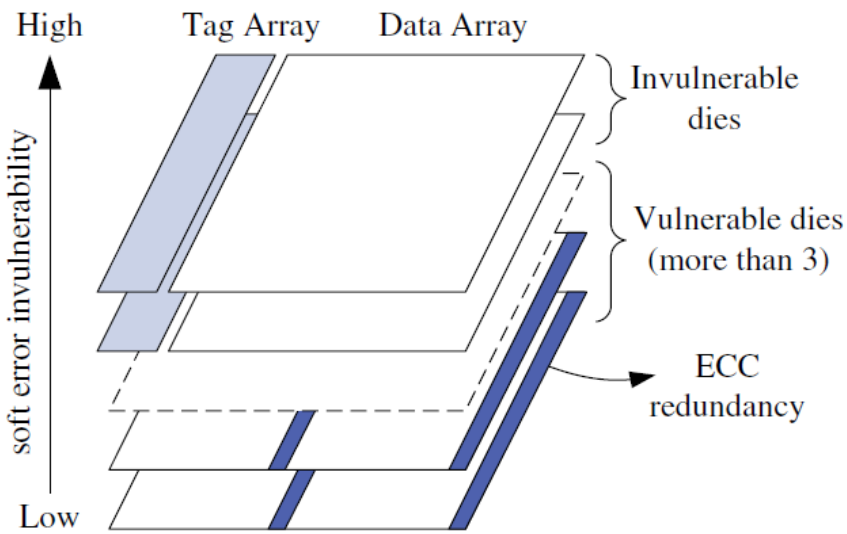

- Tag array not easily protected by ECC => allocate them on SE invulnerable die
- No need of ECC on SE invulnerable die

Sun et al. MICPRO'11

Multi-bit errors (MBEs)

- Spatial MBE: a **single particle** creating MBEs
- Temporal MBE: **multiple independent particles** striking at different times creating MBEs

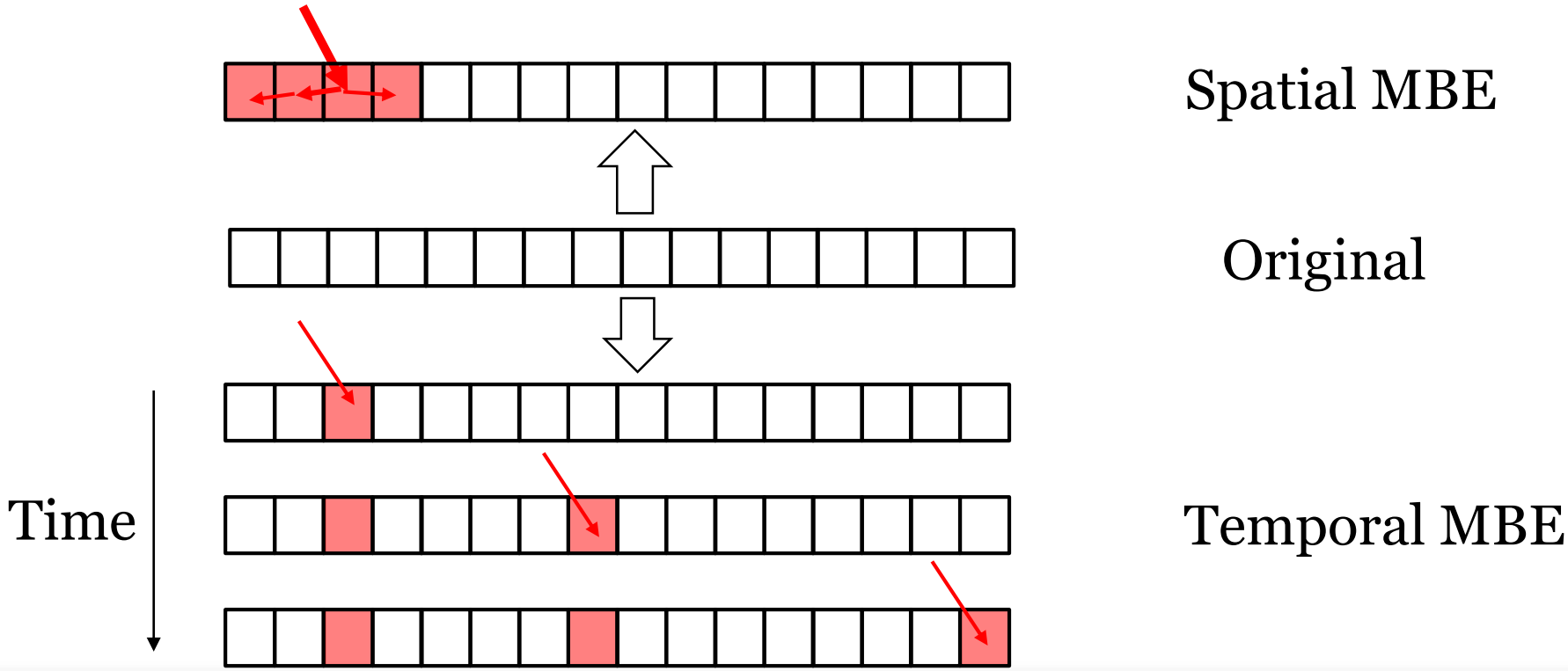

Bit-interleaving to address spatial MBEs

Baseline (no-interleaving)

A0	A1	A2	A3	B0	B1	B2	B3	C0	C1	C2	C3	D0	D1	D2	D3

Spatial MBE occurs.

A0	A1	A2	A3	B0	B1	B2	B3	C0	C1	C2	C3	D0	D1	D2	D3

Multi-bit fault in A => Difficult to correct

4:1 Bit-interleaving

A0	B0	C0	D0	A1	B1	C1	D1	A2	B2	C2	D2	A3	B3	C3	D3

Spatial MBE occurs.

A0	B0	C0	D0	A1	B1	C1	D1	A2	B2	C2	D2	A3	B3	C3	D3

Single-bit faults in A, B, C, D => Easier to correct

Memory scrubbing to address temporal MBEs

- Read data, correct error using ECC and write to same location again

- Scrubbing helps in distinguishing b/w soft and hard error
- Scrubbing corrects errors before they exceed correction capability of ECC

References

- S. Mittal et al., “A Survey of Techniques for Modeling and Improving Reliability of Computing Systems”, IEEE TPDS, 2016 (pdf)